Westford New Center Building

WESTFORD, MA

FINAL REPORT JUNE 2018

context
ARCHITECTURE
68 HARRISON AVENUE BOSTON, MA 02111
TEL 617 423 1400 **WEB** CONTEXTARC.COM

Contents

Introduction 01

01. Executive Summary 03

02. Space Needs Summary 05

03. Concept Design 07

PLANS

PERSPECTIVE RENDERINGS

04. Preliminary Project Budget 11

05. Conclusions & Recommendations 13

06. Appendices 15

A. DETAILED SPACE NEEDS STUDY

B. CONCEPT DESIGN STUDIES

C MEETING NOTES

Introduction

Context Architecture was retained by the Town of Westford in November 2017 to prepare an architectural feasibility study for a New Center Building. This report follows reviews and meetings with the Working Group Committee. Over the course of several months, Context Architecture produced a space needs program, developed concept design options, and attended meetings with the Working Group Committee with the ultimate goal of developing a plan for the proposed New Center Building that will best satisfy the Town's requirements. This report is the culmination of that process and represents our best effort to create a document that the Town can utilize for their needs to move the project forward.

Many people assisted us in the work and we are very appreciative of their advice and counsel. We want especially to thank the Working Group Committee who provided valuable guidance and with whom we met 5 times.

- Town Manager Jodi Ross
- Assistant Town Manager Eric Heideman
- Permanent Town Building Committee
  - Thomas Mahanna
  - Kirk Ware
  - Nancy Cook
  - Karen Cavanagh
- Veteran's Services Officer Terry Stader
- Director of Technology Mike Wells

Jeff Shaw, AIA, LEED AP BC+D
Principal + President

C. Christopher Logan, AIA
Associate

Executive Summary

The assignment given to Context Architecture was to provide the Town of Westford a comprehensive space needs analysis, concept building and site design, and a concept cost estimate for a New Center Building. The building, to be located on the site of the existing Westford Fire Headquarters, also involved a study of existing parking and future parking needs for the Town Hall complex (Town Hall, Police Station and New Center Building). This report is the end result of that assignment. It documents the process undertaken and includes a detailed space needs analysis, concept building plans and site plan, a concept cost estimate and a conclusion and recommendation.

Beginning in November of 2017 we kicked off a series of working meetings with the Working Group Committee, which was led by the Town Manager. The Committee was made up of Permanent Town Building Committee representatives and Town department heads. Meetings were regularly attended by Committee members. Starting with in-depth department interviews, we drafted an initial space needs analysis. After several reviews and revisions, narrowing the program requirements, the Working Group Committee approved a Final Draft to be used as the basis of the proposed concept design.

Over a number of Committee meetings Context Architecture developed the preferred site design, concept floor plans and project cost estimate. The estimated project budget includes hard construction costs, so-called 'soft' costs including A&E fees, FF&E costs and a project contingency. The proposed Westford New Center Building project is currently estimated to cost approximately $7.2 M.

The following sections of this report provide further detail of each part of this feasibility study.

SPACE NEEDS

Space Needs Summary

The purpose of the Space Needs process is to identify and confirm the Town's programmatic goals and needs set forth in the study. The main goals are to add a new 100-person meeting space, relocate the Veterans Services and Town IT departments to the New Center Building and provide space for a newly created Town Facilities Department.

The first step in the Space Needs process is to interview department heads to discuss department needs, staffing and public interaction requirements. Concurrently, we compiled existing and future parking needs to determine total site requirements.

Through multiple iterations and discussions with the key departmental heads, the final space needs study represents a two story building with meeting spaces on the first floor, town departments on the second floor and a partial basement containing storage rooms, mechanical, electrical and an elevator machine room. It should be noted that the final concept design eliminated the partial basement due to anticipated ledge removal costs. The spaces identified for the partial basement are now on the first and second floors of the building.

The parking counts was established based on actual and future needs from the departments, including existing Town Hall and Police Department parking needs.

Department	Present	Future
Parking		
Public / Future Expansion		
Public Vehicles	0	33
Technology Department		
Personal Vehicles	7	7
Veterans Services		
Personal Vehicles	1	1
Part Time	1	1
Facilities Department		
Personal Vehicles	0	3
TOTAL (New Center Bldg)	9	45
Other (Town Hall & Police Dept.)		
Vehicles	91	100
TOTAL (Complex)	100	145
Staffing		
Technology Department		
Full Time	7	7
Veterans Services		
Full Time	1	1
Part Time	1	1
Facilities Department		
Full Time	0	3
TOTAL	9	12

SPACE NEEDS

Prgm No.	Space Type Description	Qty	Needed Space Size Length	Width	NASF	Tot. Needed NASF	Floor Basement	1st	2nd
1.0	**Public & Shared Spaces**								
1.1	Vestibule	1	7	8	56	56		56	
1.2	Public Lobby	1	19	20	380	380		380	
1.3	Male Toilet Room	1	18	10	180	180		180	
1.4	Female Toilet Room	1	18	10	180	180		180	
1.5	Public Conference Room	1	12	17	204	204		204	
1.6	Public Meeting Room	1	36	46	1,656	1,656		1,656	
1.7	Public Meeting Room Storage	1	10	12	120	120		120	
1.8	CATV Room	1	8	10	80	80		80	
1.9	Staff Toilet - Male	1	7	7.5	53	53			53
1.10	Staff Toilet - Female	1	7	7.5	53	53			53
1.11	Break Room	1	10	12	120	120			120
1.12	Town File Storage	1	20	25	500	500	500		
1.13	Copy Room	1	9	10	90	90			90
2.0	**Technology Department**								
2.1	Technology Director Office	1	12	14	168	168			168
2.2	Technology Offices	1	20	22	440	440			440
2.3	Technology Workshop / Storage	1	10	18	180	180			180
2.4	Server Room	1	9	14	126	126			126
2.5	IT Training / Conference Room	1	14	20	280	280			280
3.0	**Veterans Services**								
3.1	Veterans Services Officer	1	12	14	168	168			168
3.2	Veterans Services / Waiting	1	12	16	192	192			192
3.3	Veterans Storage	1	8	14	112	112	112		
4.0	**Facilities Department**								
4.1	Facilities Director Office	1	12	14	168	168			168
4.2	Facilities Admin Office	1	12	12	144	144			144
4.3	Facilities Admin Storage	1	9	12	108	108	108		
4.4	Facilities Staff Office	1	10	12	120	120			120
5.0	**Building Support**								
5.1	Passenger Elevator	1	10	8	80	160	80	80	80
5.2	Elevator Machine Room	1	8	10	80	80	80		
5.3	Boiler Room	1	10	12	120	120	120		
5.4	Electrical Room	1	10	15	150	150	150		
5.5	Emerg. Generator Transfer Switch	1	4	5	20	20	20		
5.6	Sprinkler / Water Service	1	6	12	72	72	72		
5.7	Janitor's Closet	3	4	5	20	60	20	20	20
	Subtotal (Net Square Footage)					6,539	1,262	2,956	2,401
	Grossing Factor (walls, corridors, chases, etc.)		@	**40%**		2,616	505	1,182	960
	TOTAL SQUARE FOOTAGE					**9,155**	**1,767**	**4,138**	**3,361**

CONCEPT DESIGN

Concept Design

The proposed location for the New Center Building is on the site of the existing Fire Headquarters building in Westford center. A major goal of the design is maintaining the existing parking count, and not reducing it with the addition of the New Center Building. Therefore the new building's footprint is relatively close to the existing Fire Headquarters footprint. Another key element is the existing generator building which provides emergency power to the Town Hall, Police Station and existing Fire Headquarters. Much discussion occurred around relocating the equipment or leaving it as is. Ultimately, due to cost, it was concluded that the generator building would remain in its current location, and the New Center Building would integrate it into its form.

The final concept design is a two story slab on-grade building. The street level of the building will contain a large sub-dividable meeting room, a small conference room, a lobby/gallery space and building storage/support spaces. The upper level will contain offices for the Town's IT department, Facilities department, Veterans services and town storage.

The building has two main entrances, one from the south off of the public parking lot and another to the north off of a newly designed courtyard. Thus creating a better connection to the Town Hall and the Police Station. Visitors will enter the building and either access the large public meeting room or continue to the second floor to access town departmental offices.

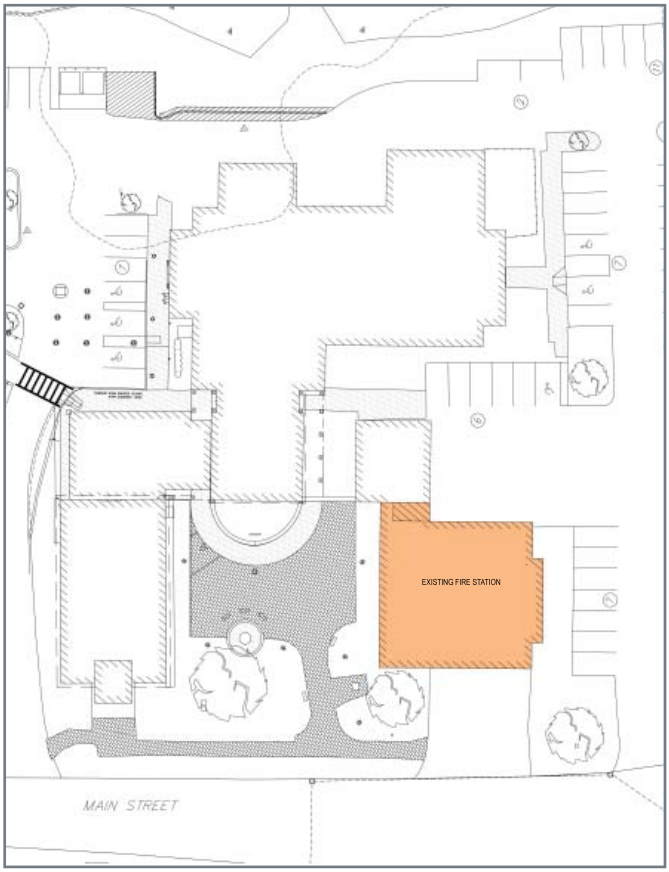

EXISTING SITE PLAN

PROPOSED SITE PLAN

CONCEPT DESIGN

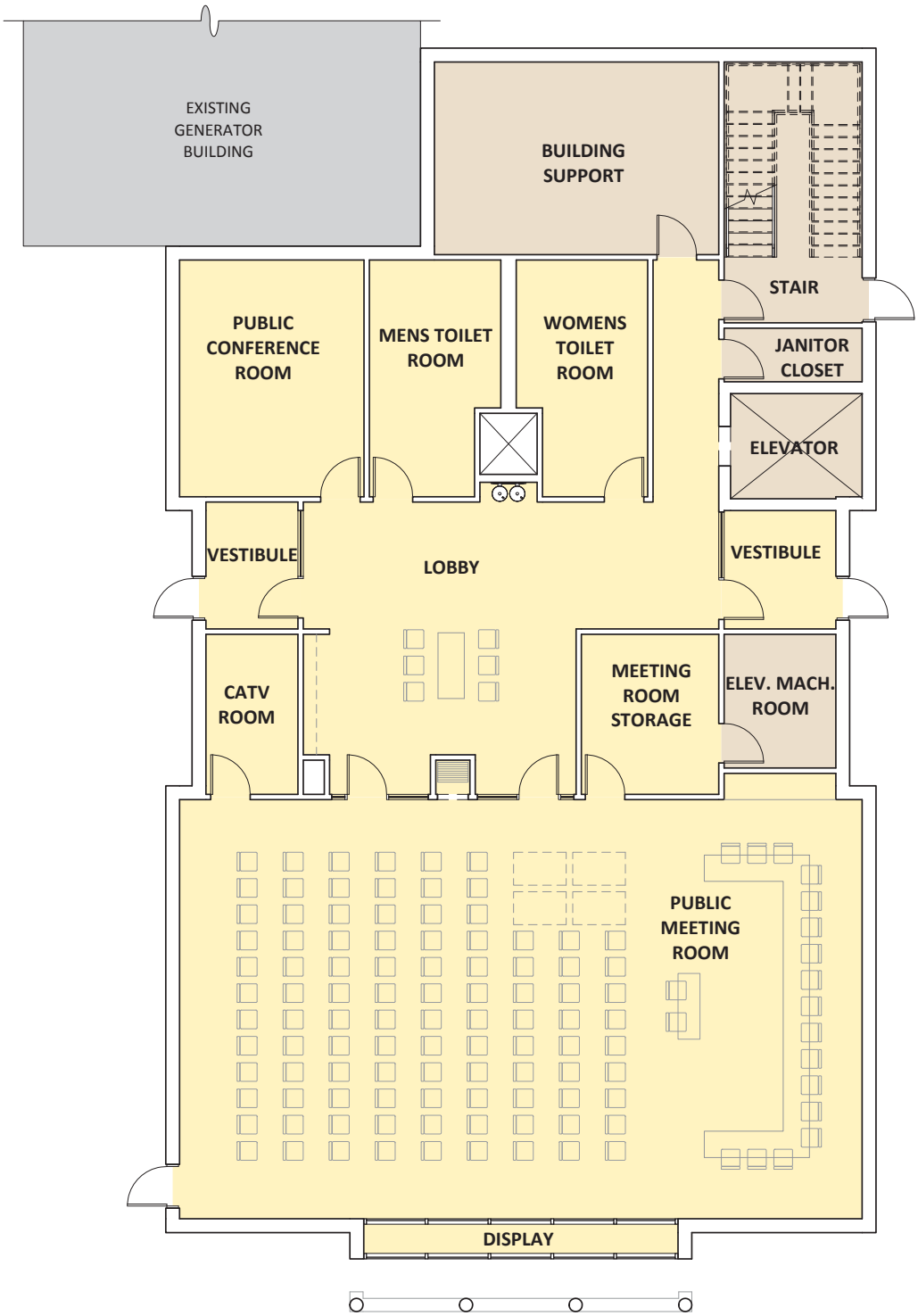

FIRST FLOOR PLAN

CONCEPT DESIGN

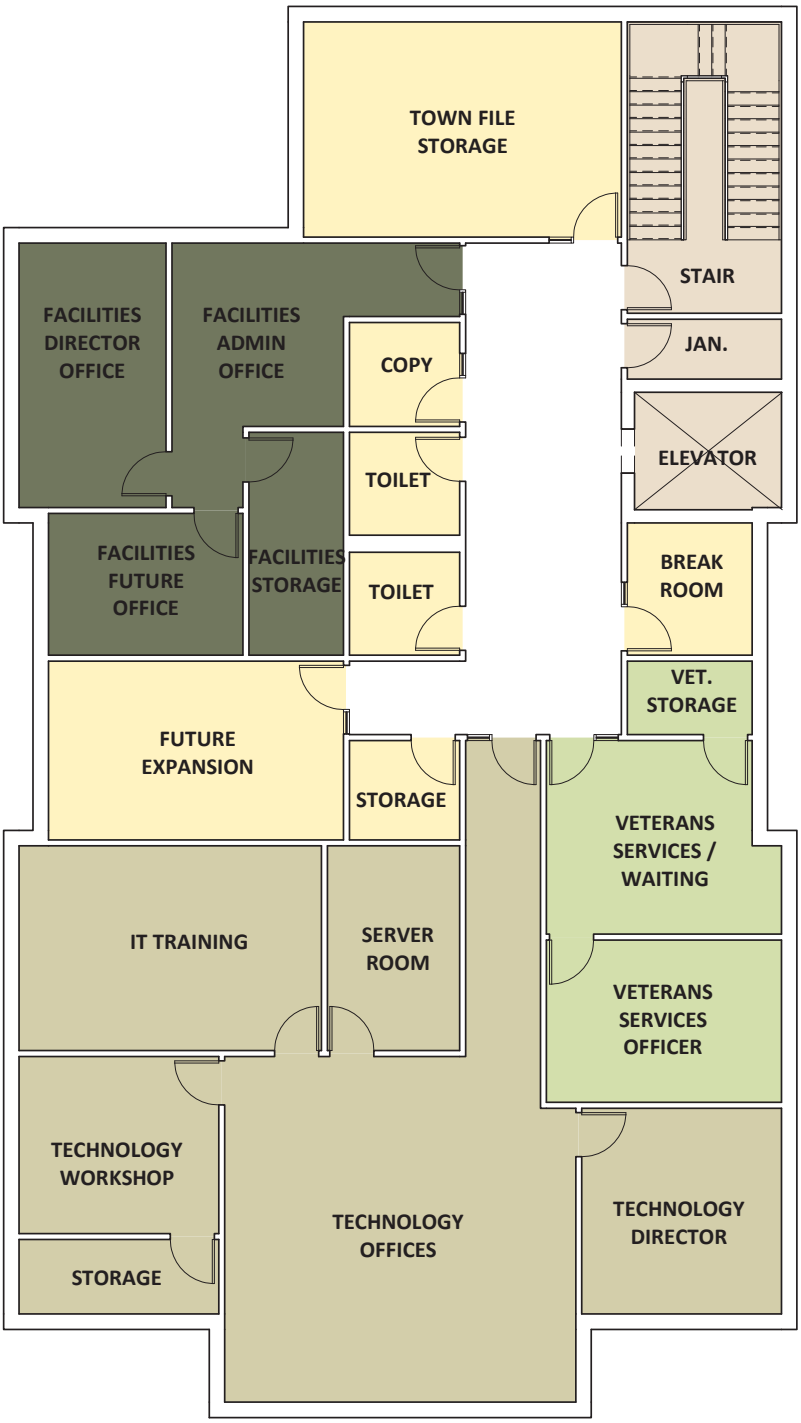

SECOND FLOOR PLAN

CONCEPT DESIGN

VIEW FROM TOWN GREEN

The final exterior concept design is a clapboard sided building with a projecting gable facing Main Street and cross gables facing the newly re-designed courtyard and parking lot. The features on the New Center Building are similar to those found on buildings in Westford Center, yet the overall massing is broken up to make it subservient to the adjacent Town Hall. The site design includes landscaping along Main Street thus visually extending the Town green to the Town Hall complex.

BUDGET

Preliminary Project Budget

The project cost estimate is based on current conditions, escalated construction costs as well as related project "soft" costs by our professional cost estimator. The cost estimate assumes a construction start of spring 2019.

The following estimate is preliminary, and should not be solely relied upon for final project budgeting. Additional information from further design and engineering will be required to provide a more accurate estimate of the New Center Building's probable construction cost.

Facility Size	*[9,184 SF]*	
CONSTRUCTION COST ESTIMATES		
Construction Cost incl demo & EG rework	$5,051,200	
Ledge Removal	$50,000	*Allowance*
Total Construction Costs	**$5,101,200**	
SOFT COSTS		
Design & Engineering		
Architectural and Engineering fees	$511,000	
Allowance for extra design services	$26,000	
Reimbursable expenses	$5,000	
Total Design & Engineering	*$542,000*	
Professional Services		
OPM/Clerk of the Works	$205,000	
Geotechnical Engineering & Borings	$10,000	
MEP Commissioning	$25,000	
Construction Testing & Geotech Inspections	$20,000	*Allowance*
Total Professional Services	*$260,000*	
Fixtures, Furnishings & Equipment		
Furnishings & Equipment (incl HD storage)	$100,000	*Allowance*
Allowance for Technology	$100,000	*Allowance*
Allowance for Security & CCTV System	$75,000	*Allowance*
Total Fixtures, Furnishings & Equipment	*$275,000*	
Project Related Expenses		
Topographic and Utility Survey	$5,000	
Printing bid sets & advertising	$5,000	*Allowance*
Moving Expenses	$0	
Utility Fees & Backcharges	$50,000	*Allowance*
Total Project Related Expenses	*$60,000*	
Total Soft Costs	**$1,137,000**	
Project Contingency	$936,000	
PROJECT TOTAL	**$7,174,200**	

RECOMMENDATIONS

Conclusion & Recommendations

As a result of this study, the proposed design for the Westford New Center Building is a two-story 10,000 SF building housing a 100-person meeting room, Veterans Services, Facilities Department, Town IT Department, Town file storage and building support spaces. The total project cost is estimated at approximately $7M, including construction costs, 'soft' costs, and project contingency. The New Center Building would be located on the site of the existing Fire Headquarters building and the new site design would add 7 additional parking spaces. The connection between the Town Hall and the new building would be emphasized by a new landscape design and orientation of the new building's entrances. As an important historical center, the New Center Building would compliment the existing Town Hall complex buildings both in size, form and architectural detailing.

To address the needs of the Town of Westford, the following are recommended next steps:

- Demolition of existing Fire Headquarters, including review of support for maintaining the existing antenna structure
- Review of generator feed to existing Fire Headquarters for future connection to the New Center Building
- Geotechnical investigation within/around the existing Fire Headquarters footprint
- A comprehensive parking study for the Town Hall complex
- Comprehensive regulatory review for Town Hall complex
- Final building design and cost estimation prior to biding the work

APPENDICES

Appendices

A DETAILED SPACE NEEDS STUDY

B CONCEPT DESIGN STUDIES

C. MEETING NOTES

APPENDICES

A. Detailed Space Needs Study

Westford New Center Building

Space Needs Study

WESTFORD, MA

FINAL

DECEMBER 14, 2017

context
ARCHITECTURE
68 HARRISON AVENUE BOSTON, MA 02111
TEL 617 423 1400 **WEB** CONTEXTARC.COM

Contents

Parking Needs Summary 4

Space Needs Summary 5

Space Needs

- Shared 7
- Technology 21
- Veterans 27
- Facilities 31
- Building Support 37

STAFFING / PARKING NEEDS SUMMARY

Department	Present	Future
Parking		
Public / Future Expansion		
Public Vehicles	0	100
Technology Department		
Personal Vehicles	7	7
Veterans Services		
Personal Vehicles	1	1
Part Time	1	1
Facilities Department		
Personal Vehicles	0	3
TOTAL (New Center Bldg)	9	112
Other (Town Hall & Police Dept.)		
Vehicles	91	91
TOTAL (Complex)	100	203
Staffing		
Technology Department		
Full Time	7	7
Veterans Services		
Full Time	1	1
Part Time	1	1
Facilities Department		
Full Time	0	3
TOTAL	9	12

SPACE NEEDS SUMMARY

Prgm No.	Space Type Description	Qty	Needed Space Size Length	Width	NASF	Tot. Needed NASF	Floor Basement	1st	2nd
1.0	**Public & Shared Spaces**								
1.1	Vestibule	1	7	8	56	56		56	
1.2	Public Lobby	1	19	20	380	380		380	
1.3	Male Toilet Room	1	18	10	180	180		180	
1.4	Female Toilet Room	1	18	10	180	180		180	
1.5	Public Conference Room	1	12	17	204	204		204	
1.6	Public Meeting Room	1	36	46	1,656	1,656		1,656	
1.7	Public Meeting Room Storage	1	10	12	120	120		120	
1.8	CATV Room	1	8	10	80	80		80	
1.9	Staff Toilet - Male	1	7	7.5	53	53			53
1.10	Staff Toilet - Female	1	7	7.5	53	53			53
1.11	Break Room	1	10	12	120	120			120
1.12	Town File Storage	1	20	25	500	500	500		
1.13	Copy Room	1	9	10	90	90			90
2.0	**Technology Department**								
2.1	Technology Director Office	1	12	14	168	168			168
2.2	Technology Offices	1	20	22	440	440			440
2.3	Technology Workshop / Storage	1	10	18	180	180			180
2.4	Server Room	1	9	14	126	126			126
2.5	IT Training / Conference Room	1	14	20	280	280			280
3.0	**Veterans Services**								
3.1	Veterans Services Officer	1	12	14	168	168			168
3.2	Veterans Services / Waiting	1	12	16	192	192			192
3.3	Veterans Storage	1	8	14	112	112	112		
4.0	**Facilities Department**								
4.1	Facilities Director Office	1	12	14	168	168			168
4.2	Facilities Admin Office	1	12	12	144	144			144
4.3	Facilities Admin Storage	1	9	12	108	108	108		
4.4	Facilities Staff Office	1	10	12	120	120			120
5.0	**Building Support**								
5.1	Passenger Elevator	1	10	8	80	160	80	80	80
5.2	Elevator Machine Room	1	8	10	80	80	80		
5.3	Boiler Room	1	10	12	120	120	120		
5.4	Electrical Room	1	10	15	150	150	150		
5.5	Emerg. Generator Transfer Switch	1	4	5	20	20	20		
5.6	Sprinkler / Water Service	1	6	12	72	72	72		
5.7	Janitor's Closet	3	4	5	20	60	20	20	20
	Subtotal (Net Square Footage)					6,539	1,262	2,956	2,401
	Grossing Factor (walls, corridors, chases, etc.)		@	**40%**		2,616	505	1,182	960
	TOTAL SQUARE FOOTAGE					**9,155**	**1,767**	**4,138**	**3,361**

Shared Program Space Needs

SHARED

1.1 VESTIBULE

Adjacency Requirement	Adjacent to Public Lobby & Exterior
Public Access	High
Security Requirements	Low, capable of emergency lock down
Contract Millwork / Equipment	None
Floor	Granite or other durable material
Walls	GWB, painted & glazing
Ceiling	GWB, painted
Lighting / Electrical	LED
HVAC / Plumbing	A/C
Special Needs	Walk-off mat (Recessed)
Owner supplied Furn. / Equip.	None

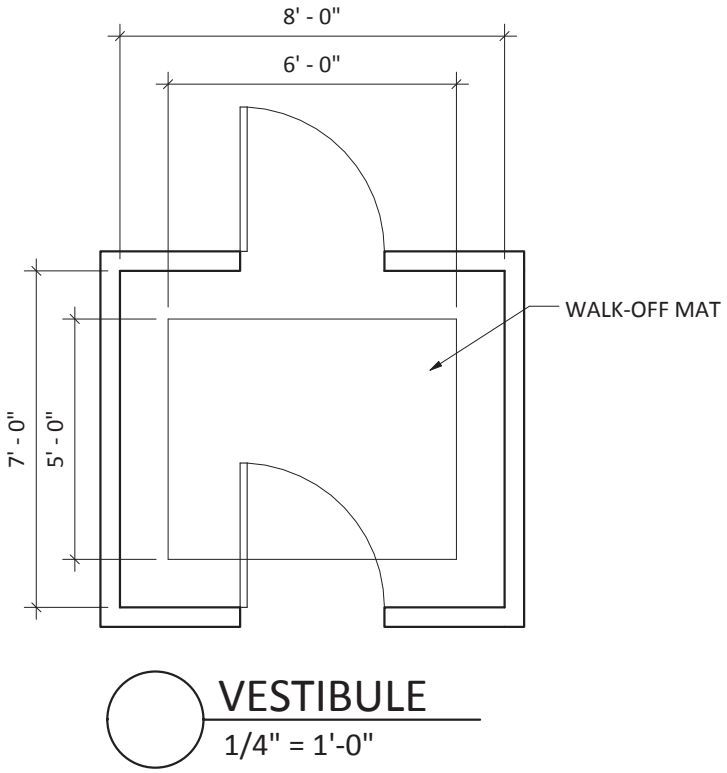

1.2 PUBLIC LOBBY

Adjacency Requirement	Adjacent to Vestibule, Public Toilet Rooms, Public Meeting Room
Public Access	High
Security Requirements	Low
Contract Millwork / Equipment	Pamphlet rack, display cases
Floor	Granite or other durable material
Walls	GWB, painted & glazing
Ceiling	ACT
Lighting / Electrical	LED
HVAC / Plumbing	A/C; drinking fountain
Special Needs	None
Owner supplied Furn. / Equip.	Table & chairs

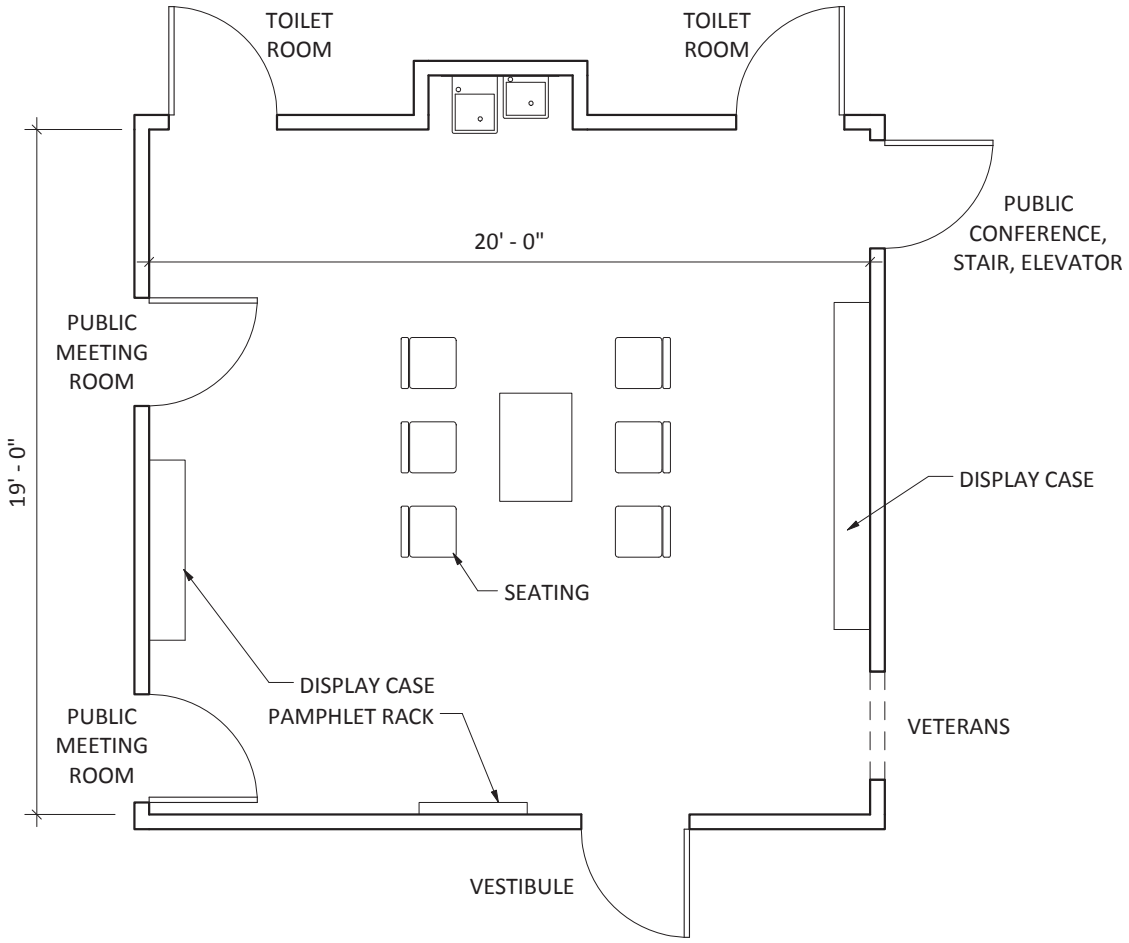

PUBLIC LOBBY
3/16" = 1'-0"

SHARED

1.3 MALE TOILET ROOM

Adjacency Requirement	Adjacent to Public Lobby
Public Access	High
Security Requirements	Low
Contract Millwork / Equipment	Bathroom accessories
Floor	Ceramic Tile
Walls	GWB, painted & ceramic tile wainscot (wet wall)
Ceiling	GWB, painted
Lighting / Electrical	LED
HVAC / Plumbing	A/C; Toilet, sink
Special Needs	Handicap accessible
Owner supplied Furn. / Equip.	None

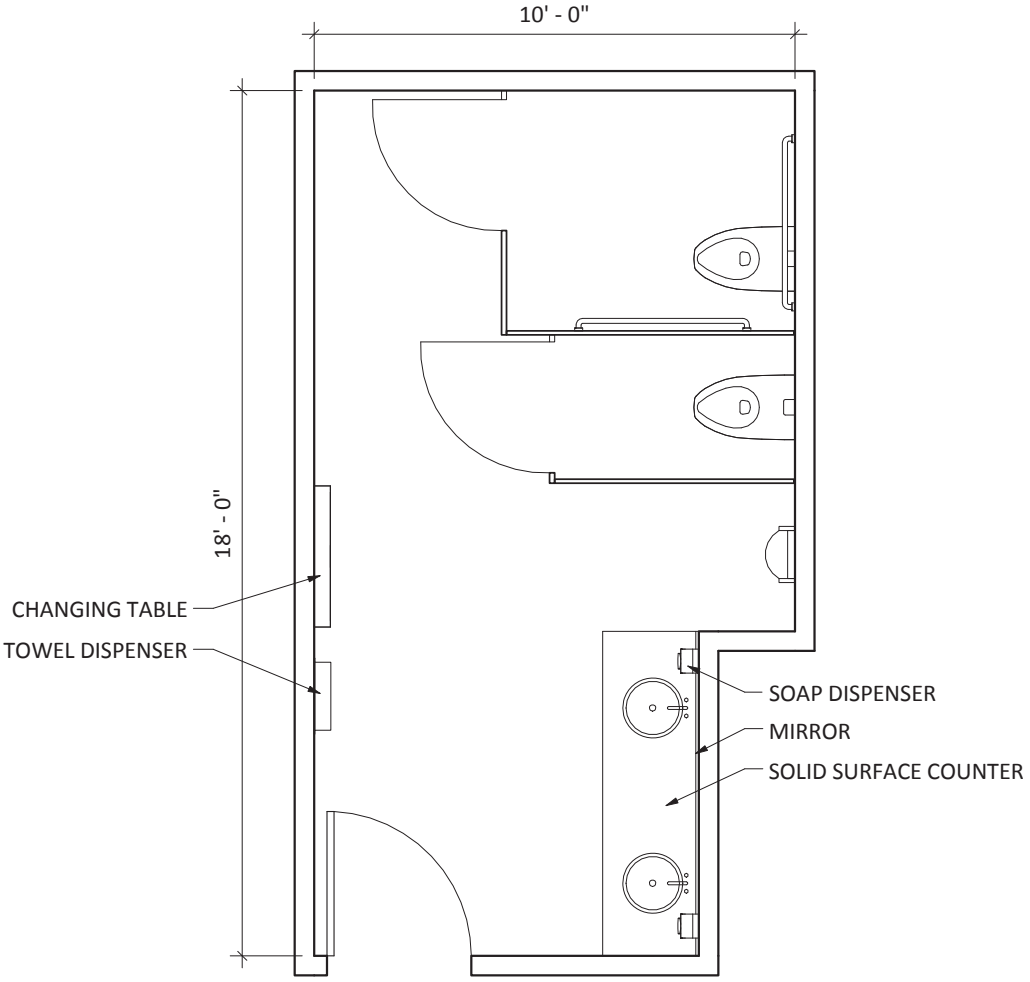

MALE TOILET ROOM
1/4" = 1'-0"

1.4 FEMALE TOILET ROOM

Adjacency Requirement	Adjacent to Public Lobby
Public Access	High
Security Requirements	Low
Contract Millwork / Equipment	Bathroom accessories
Floor	Ceramic Tile
Walls	GWB, painted & ceramic tile wainscot (wet wall)
Ceiling	GWB, painted
Lighting / Electrical	LED
HVAC / Plumbing	A/C; Toilet, sink
Special Needs	Handicap accessible
Owner supplied Furn. / Equip.	None

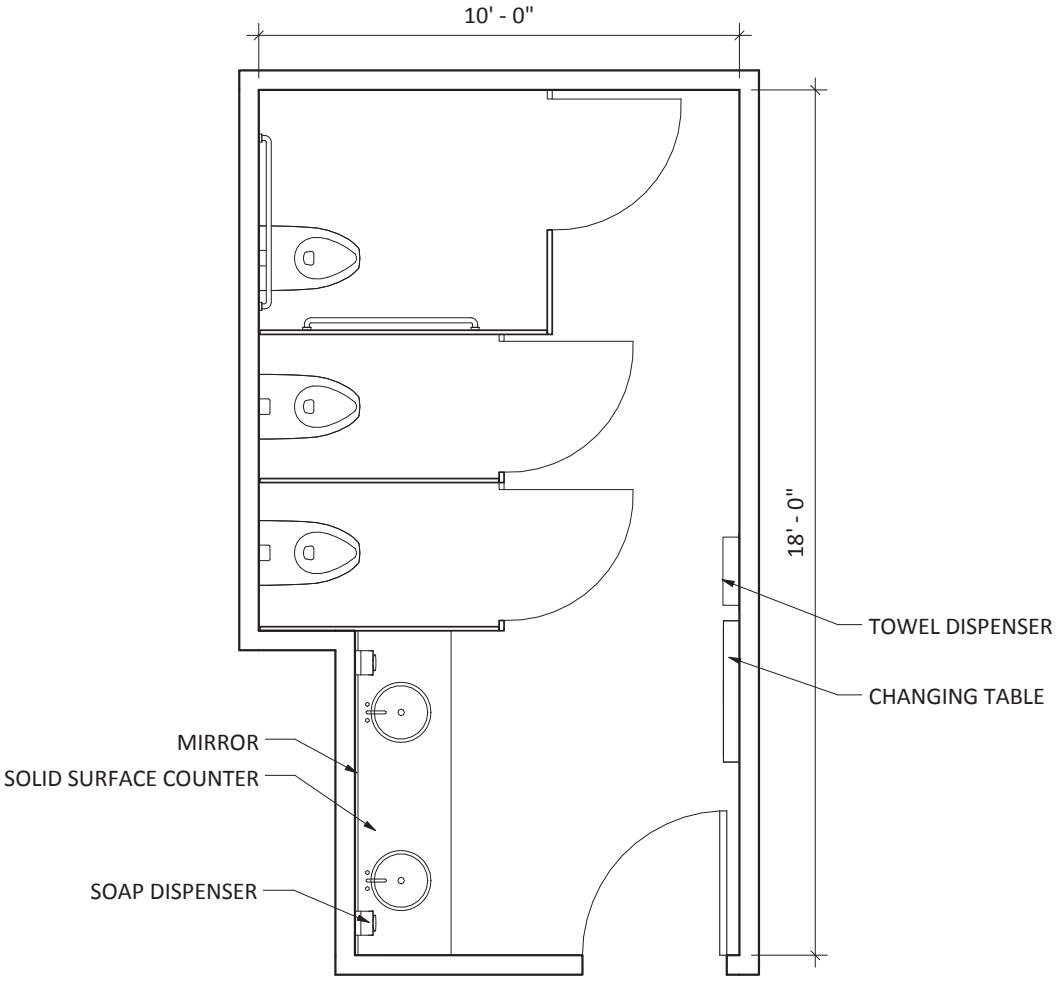

FEMALE TOILET ROOM
1/4" = 1'-0"

SHARED

1.5 PUBLIC CONFERENCE ROOM

Adjacency Requirement	Adjacent to Public Lobby
Public Access	Moderate
Security Requirements	Low
Contract Millwork / Equipment	None
Floor	Carpet tile
Walls	GWB, painted
Ceiling	ACT
Lighting / Electrical	LED
HVAC / Plumbing	A/C
Special Needs	None
Owner supplied Furn. / Equip.	Table & chairs to seat 10 people

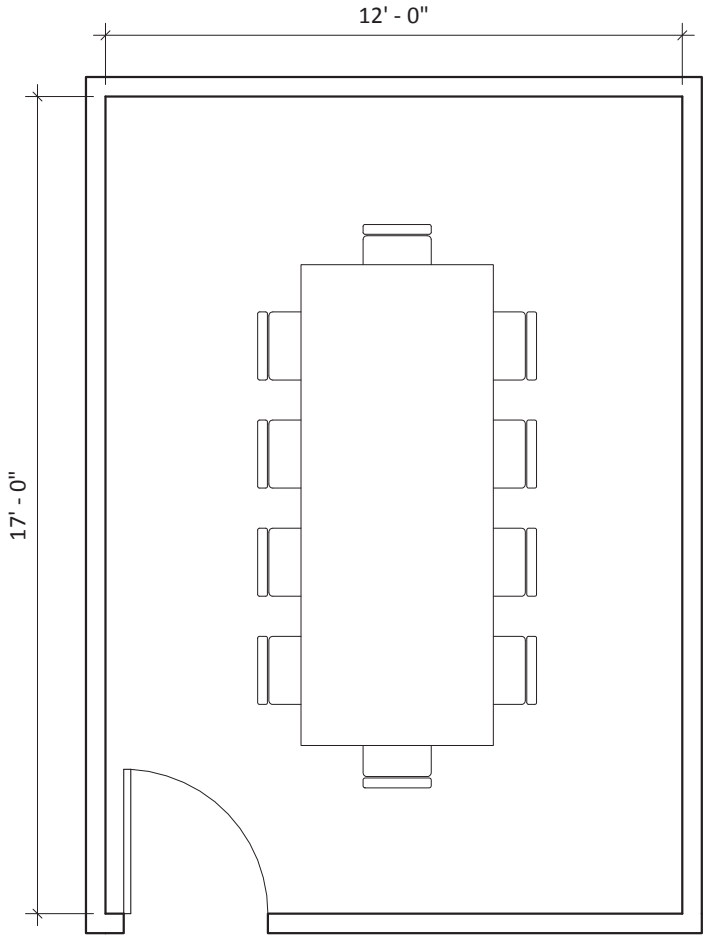

PUBLIC CONFERENCE ROOM
1/4" = 1'-0"

1.6 PUBLIC MEETING ROOM

Adjacency Requirement	Adjacent to Public Lobby
Public Access	High
Security Requirements	Low
Contract Millwork / Equipment	Counter, coat rack & shelf, motorized projection screen & ceiling mounted projector, accordian wall system w/ high STC rating
Floor	Carpet Tile
Walls	GWB, painted & glazing
Ceiling	ACT
Lighting / Electrical	LED
HVAC / Plumbing	A/C; Sink
Special Needs	Panic button, bullet resistant glazing & doors to public areas
Owner supplied Furn. / Equip.	U-shaped table & chairs for 17 people, presenter table & chairs, (103) chairs, TVs

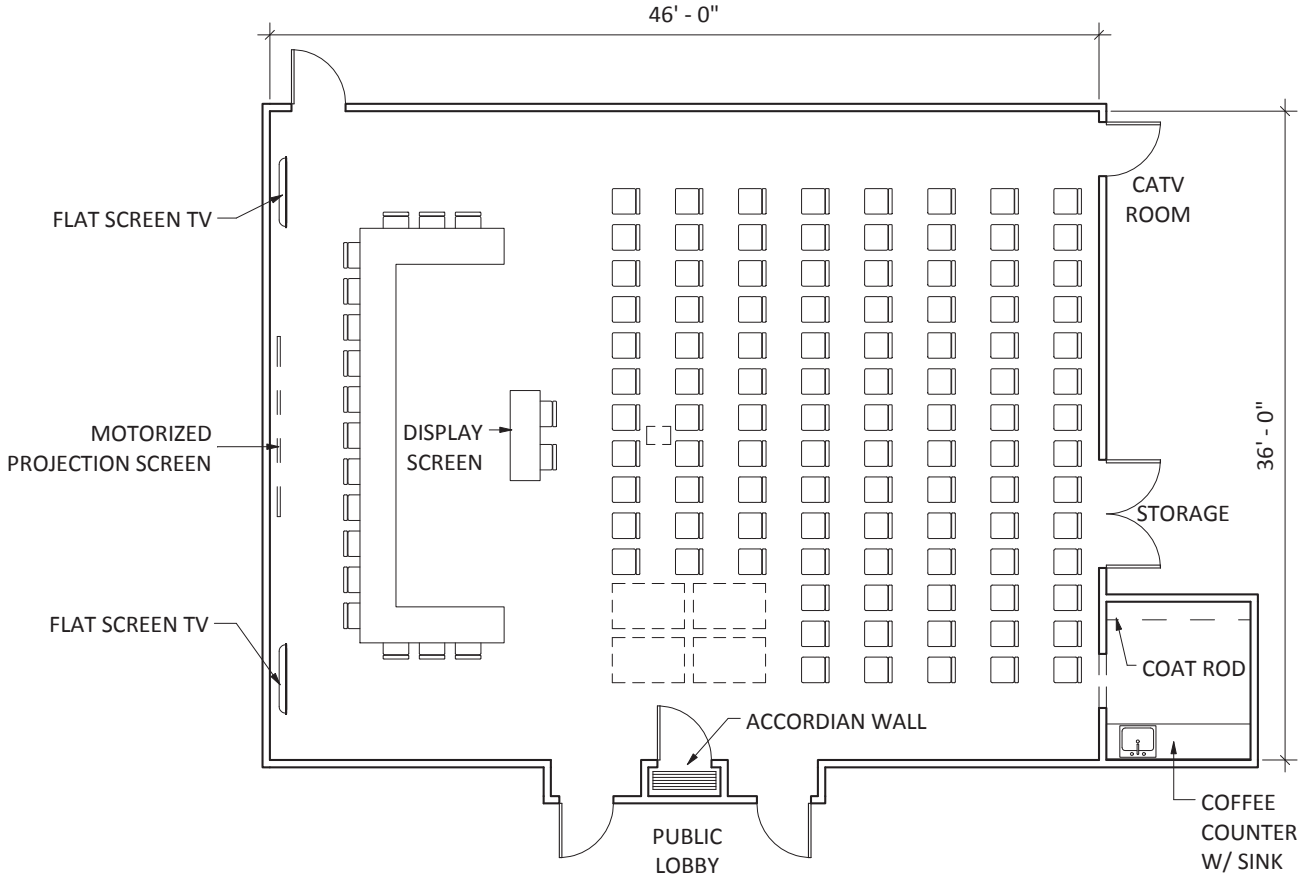

PUBLIC MEETING ROOM
3/32" = 1'-0"

SHARED

1.7 PUBLIC MEETING ROOM STORAGE

Adjacency Requirement	Adjacent to Public Meeting Room
Public Access	Low
Security Requirements	Moderate
Contract Millwork / Equipment	None
Floor	Resilient flooring
Walls	GWB, painted
Ceiling	ACT
Lighting / Electrical	LED
HVAC / Plumbing	None
Special Needs	Room to store tables & chairs
Owner supplied Furn. / Equip.	None

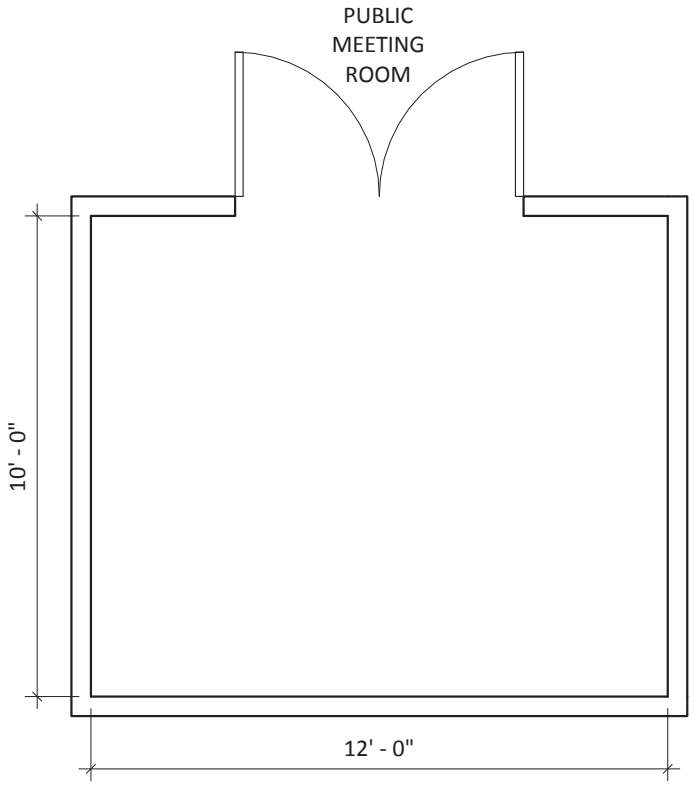

PUBLIC MEETING ROOM STORAGE
1/4" = 1'-0"

1.8 CATV ROOM

Adjacency Requirement	Adjacent to Public Meeting Room
Public Access	Low
Security Requirements	Moderate
Contract Millwork / Equipment	Work counter, shelving
Floor	Resilient flooring
Walls	GWB, painted
Ceiling	ACT
Lighting / Electrical	LED
HVAC / Plumbing	A/C
Special Needs	Window into Public Meeting Room
Owner supplied Furn. / Equip.	Chair

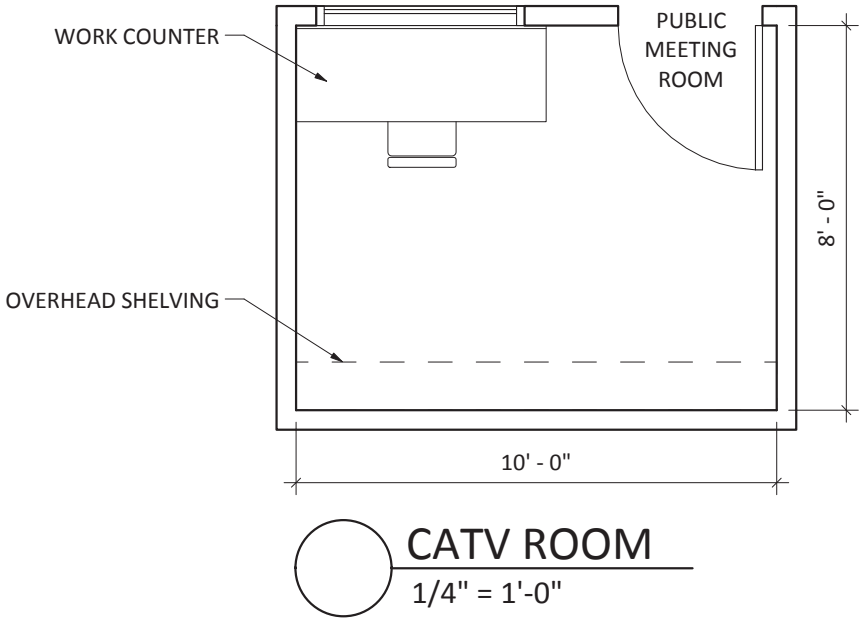

1.9 STAFF TOILET - MALE

Adjacency Requirement	Adjacent to office spaces
Public Access	Low
Security Requirements	Low
Contract Millwork / Equipment	Bathroom accessories
Floor	Ceramic Tile
Walls	GWB, painted & ceramic tile wainscot (wet wall)
Ceiling	GWB, painted
Lighting / Electrical	LED
HVAC / Plumbing	A/C; Toilet, sink
Special Needs	Handicap accessible, door closers w/ occupancy indicators
Owner supplied Furn. / Equip.	None

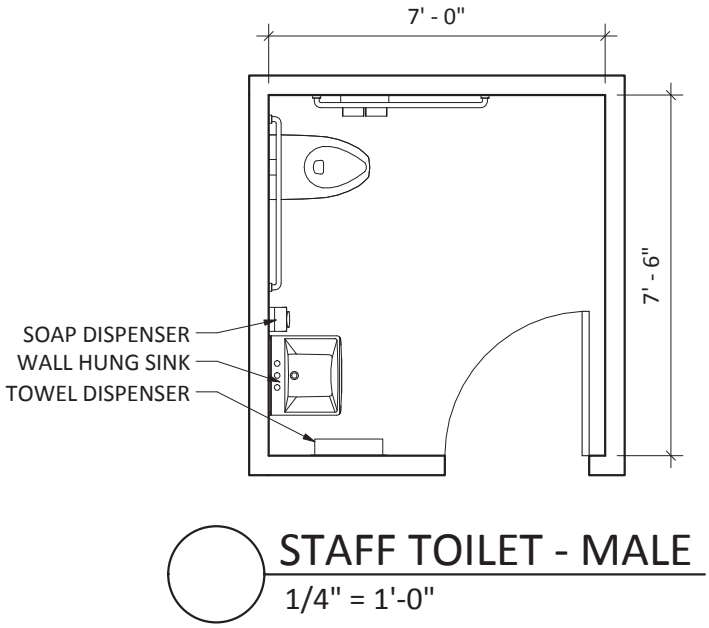

1.10 STAFF TOILET - FEMALE

Adjacency Requirement	Adjacent to office spaces
Public Access	Low
Security Requirements	Low
Contract Millwork / Equipment	Bathroom accessories
Floor	Ceramic Tile
Walls	GWB, painted & ceramic tile wainscot (wet wall)
Ceiling	GWB, painted
Lighting / Electrical	LED
HVAC / Plumbing	A/C; Toilet, sink
Special Needs	Handicap accessible, door closers w/ occupancy indicators
Owner supplied Furn. / Equip.	None

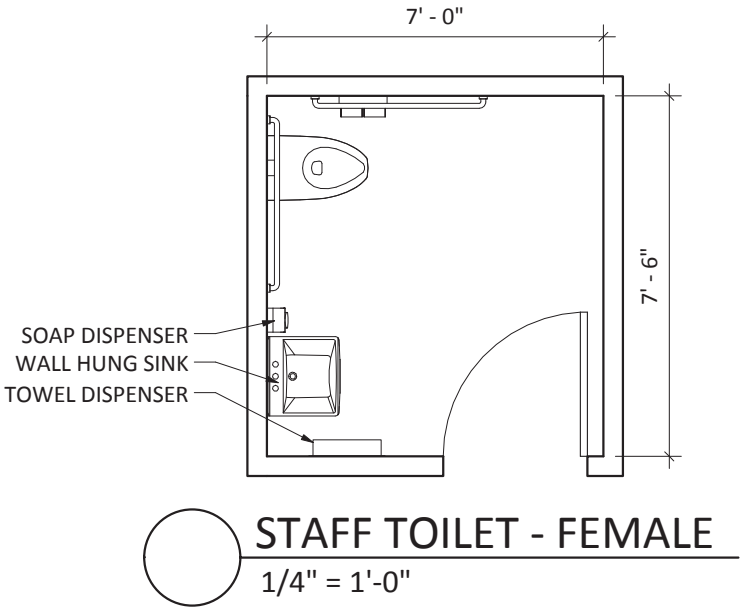

1.11 BREAK ROOM

Adjacency Requirement	Adjacent to office spaces
Public Access	Low
Security Requirements	Low
Contract Millwork / Equipment	Counter, lower cabinets, upper cabinets
Floor	Resilient flooring
Walls	GWB, painted
Ceiling	ACT
Lighting / Electrical	LED
HVAC / Plumbing	A/C; Sink
Special Needs	None
Owner supplied Furn. / Equip.	Table & chairs, small kitchen appliances

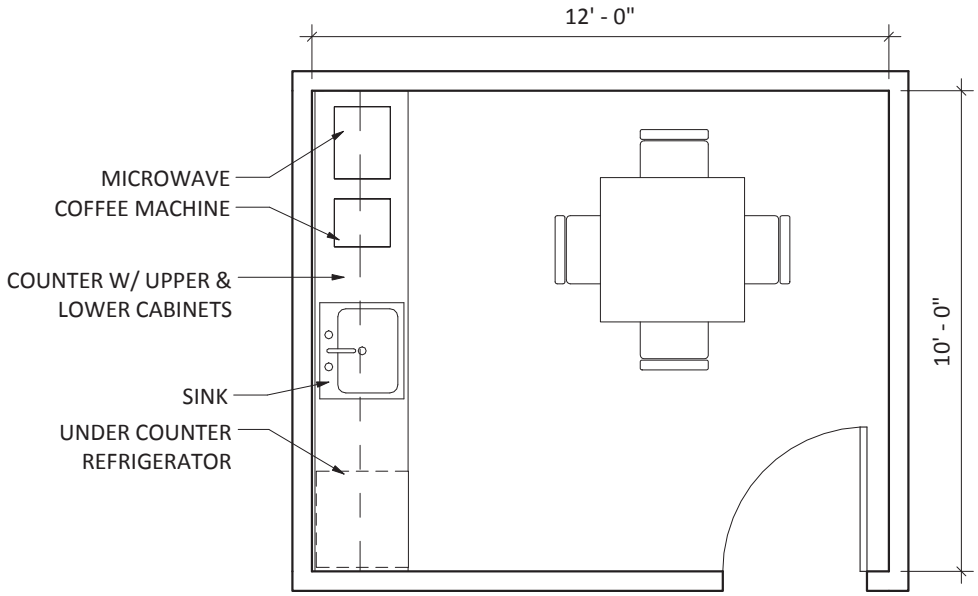

BREAK ROOM
1/4" = 1'-0"

1.12 TOWN FILE STORAGE

Adjacency Requirement	None
Public Access	Low
Security Requirements	High
Contract Millwork / Equipment	None
Floor	Resilient flooring
Walls	GWB, painted
Ceiling	ACT
Lighting / Electrical	LED
HVAC / Plumbing	A/C; Sink
Special Needs	Structural support for high density filing system
Owner supplied Furn. / Equip.	High density filing system

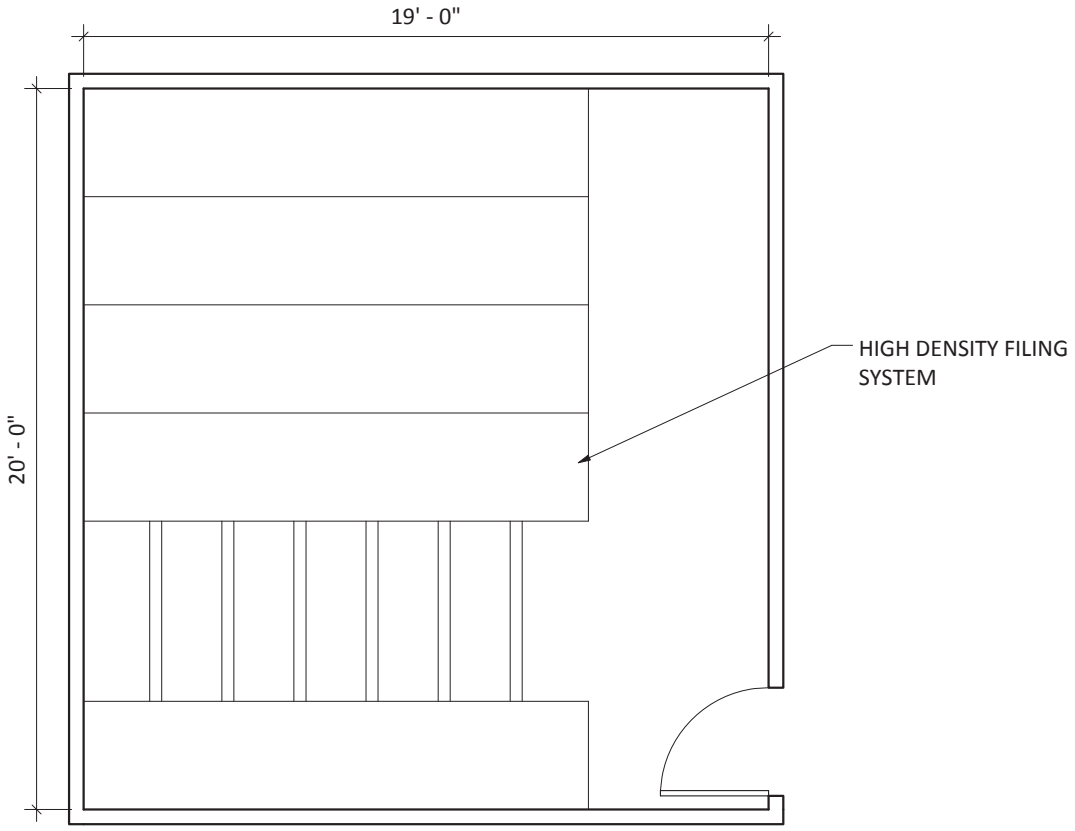

TOWN FILE STORAGE
3/16" = 1'-0"

SHARED

1.13 COPY ROOM

Adjacency Requirement	Adjacent to office spaces
Public Access	Low
Security Requirements	Low
Contract Millwork / Equipment	Counter, lower cabinets, overhead shelving
Floor	Resilient flooring
Walls	GWB, painted
Ceiling	ACT
Lighting / Electrical	LED
HVAC / Plumbing	A/C
Special Needs	None
Owner supplied Furn. / Equip.	Copier/scanner/printer

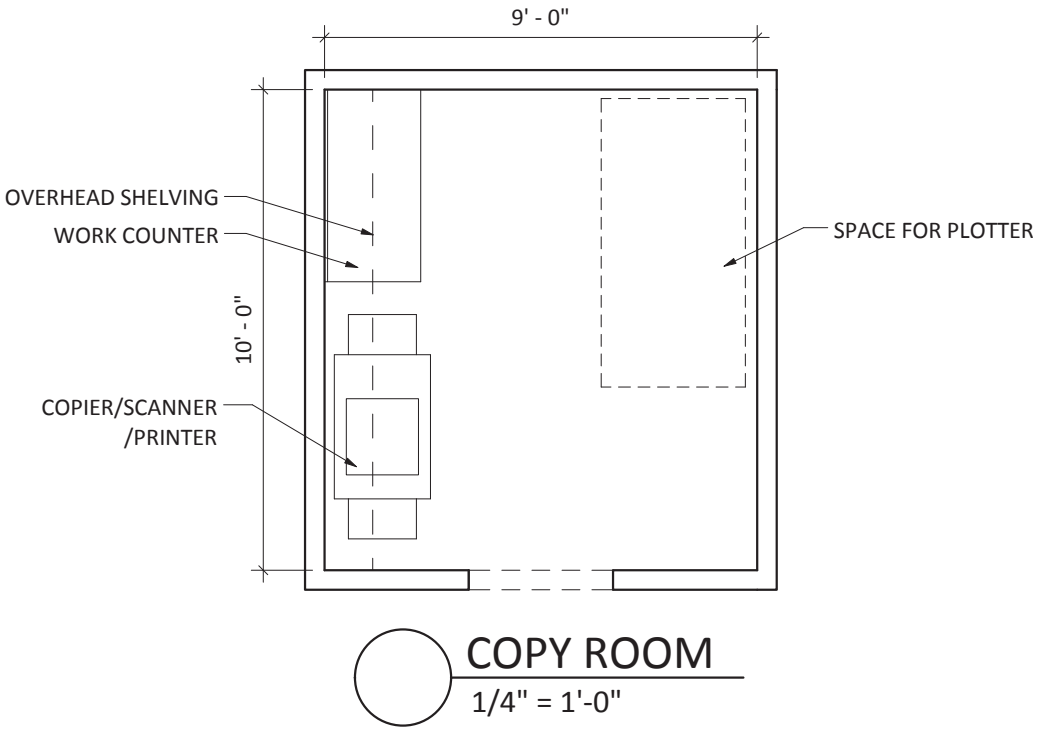

Technology Dept. Space Needs

2.1 TECHNOLOGY DIRECTOR OFFICE

Adjacency Requirement	Adjacent to Technology Offices
Public Access	Low
Security Requirements	Moderate
Contract Millwork / Equipment	None
Floor	Carpet tile
Walls	GWB, painted
Ceiling	ACT
Lighting / Electrical	LED / (1) UPS outlet
HVAC / Plumbing	A/C
Special Needs	None
Owner supplied Furn. / Equip.	Office desk & chair, lateral files, guest table & chairs, coat cabinet, TV

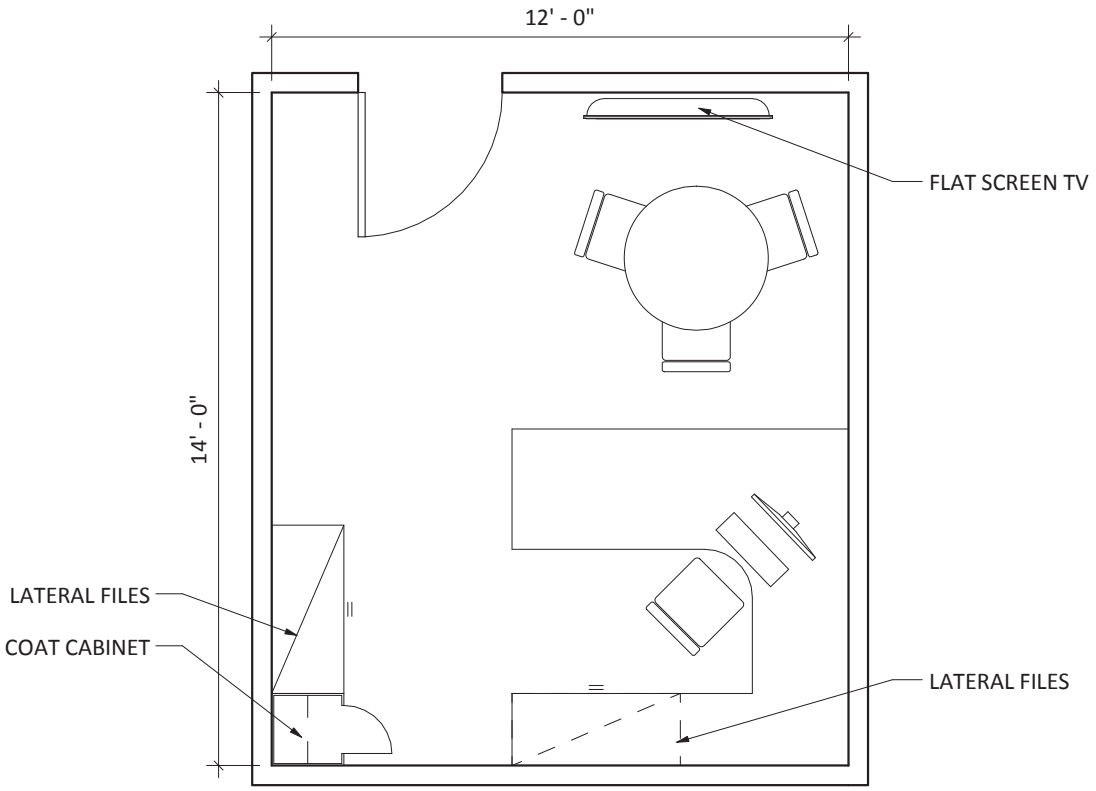

TECHNOLOGY DIRECTOR OFFICE
1/4" = 1'-0"

2.2 TECHNOLOGY OFFICES

Adjacency Requirement	Adjacent to Technology Director Office
Public Access	Low
Security Requirements	Moderate
Contract Millwork / Equipment	None
Floor	Carpet tile
Walls	GWB, painted
Ceiling	ACT
Lighting / Electrical	LED / (1) UPS outlet per workstation
HVAC / Plumbing	A/C
Special Needs	None
Owner supplied Furn. / Equip.	(6) workstations w/ desk chair & lateral file, (2) guest chairs, coat closet

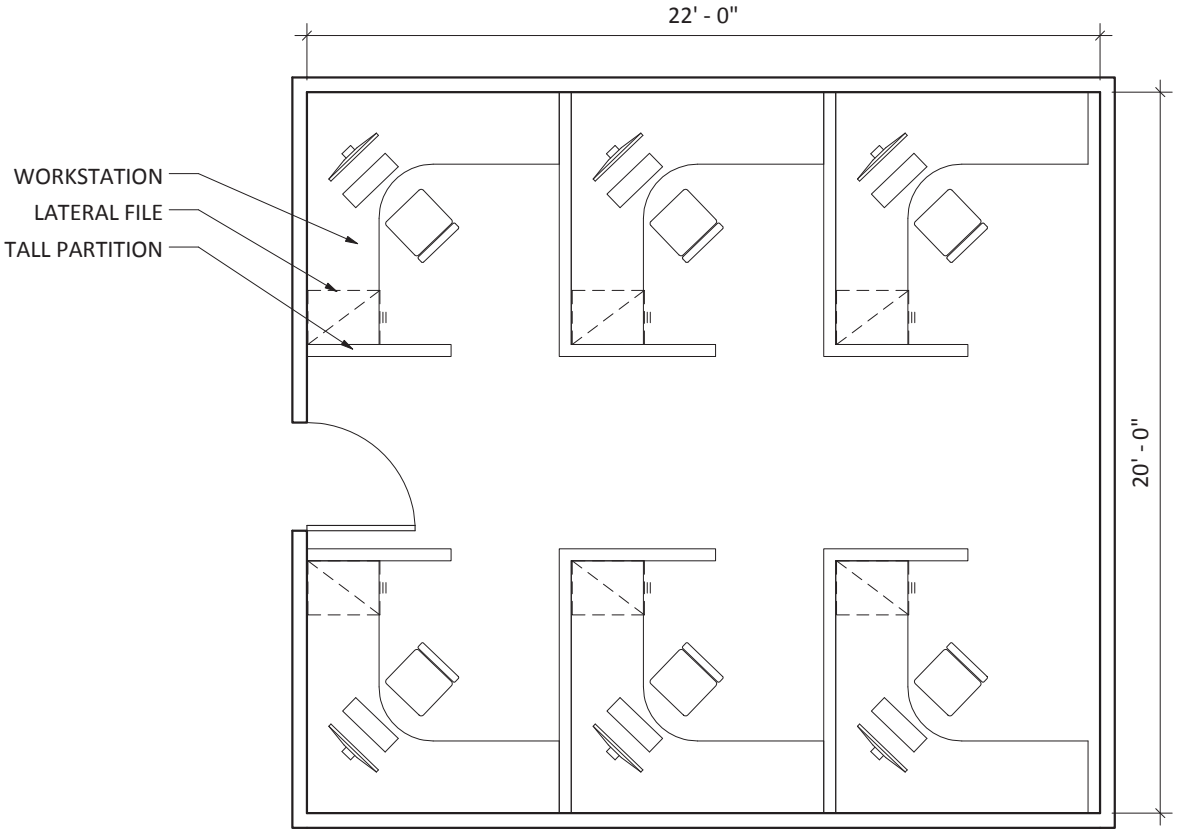

TECHNOLOGY OFFICES
3/16" = 1'-0"

2.3 TECHNOLOGY WORKSHOP / STORAGE

Adjacency Requirement	Near Technology Department
Public Access	None
Security Requirements	Moderate
Contract Millwork / Equipment	Counter
Floor	Carpet tile
Walls	GWB, painted
Ceiling	ACT
Lighting / Electrical	LED
HVAC / Plumbing	A/C
Special Needs	None
Owner supplied Furn. / Equip.	Desk chair, storage units

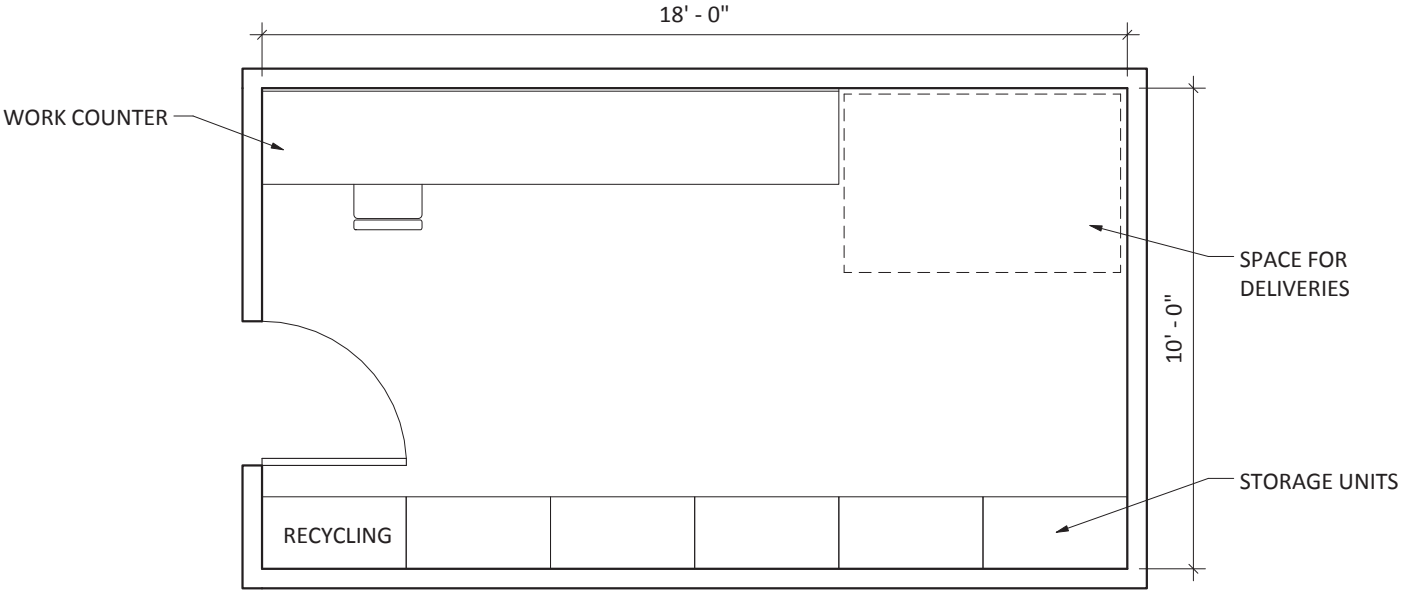

TECHNOLOGY WORKSHOP / STORAGE
1/4" = 1'-0"

2.4 SERVER ROOM

Adjacency Requirement	None
Public Access	None
Security Requirements	Moderate
Contract Millwork / Equipment	None
Floor	Carpet tile
Walls	GWB, painted, plywood panels on all walls
Ceiling	Exposed
Lighting / Electrical	LED
HVAC / Plumbing	A/C, coordinated w/ equipment needs
Special Needs	Power FP system
Owner supplied Furn. / Equip.	None

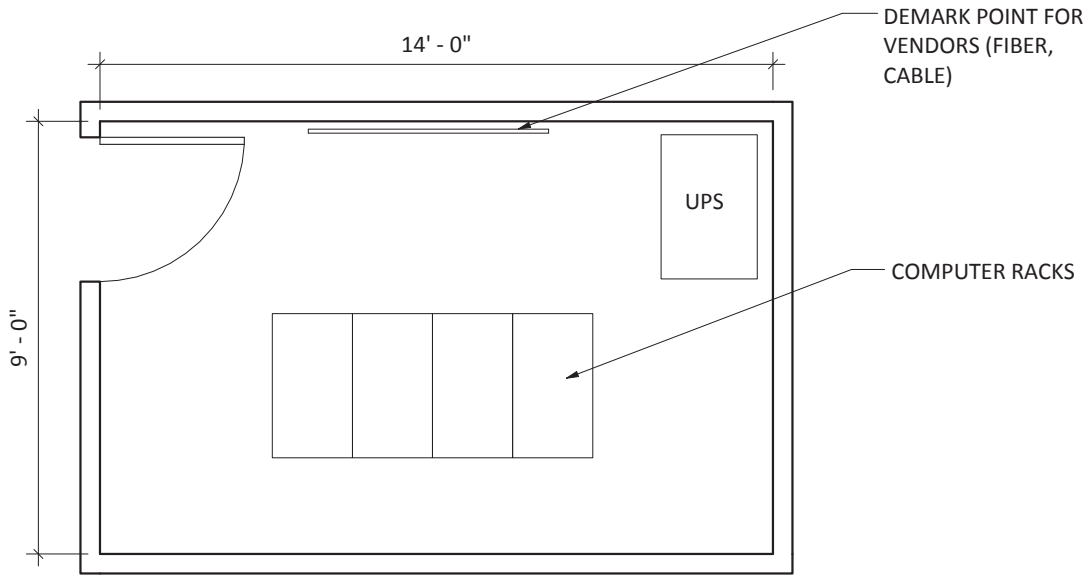

SERVER ROOM
1/4" = 1'-0"

2.5 IT TRAINING / CONFERENCE ROOM

Adjacency Requirement	Near Technology Department
Public Access	Moderate
Security Requirements	Low
Contract Millwork / Equipment	None
Floor	Carpet tile
Walls	GWB, painted
Ceiling	ACT
Lighting / Electrical	LED
HVAC / Plumbing	A/C
Special Needs	EOC use
Owner supplied Furn. / Equip.	(12) chairs, (6) training tables, TV

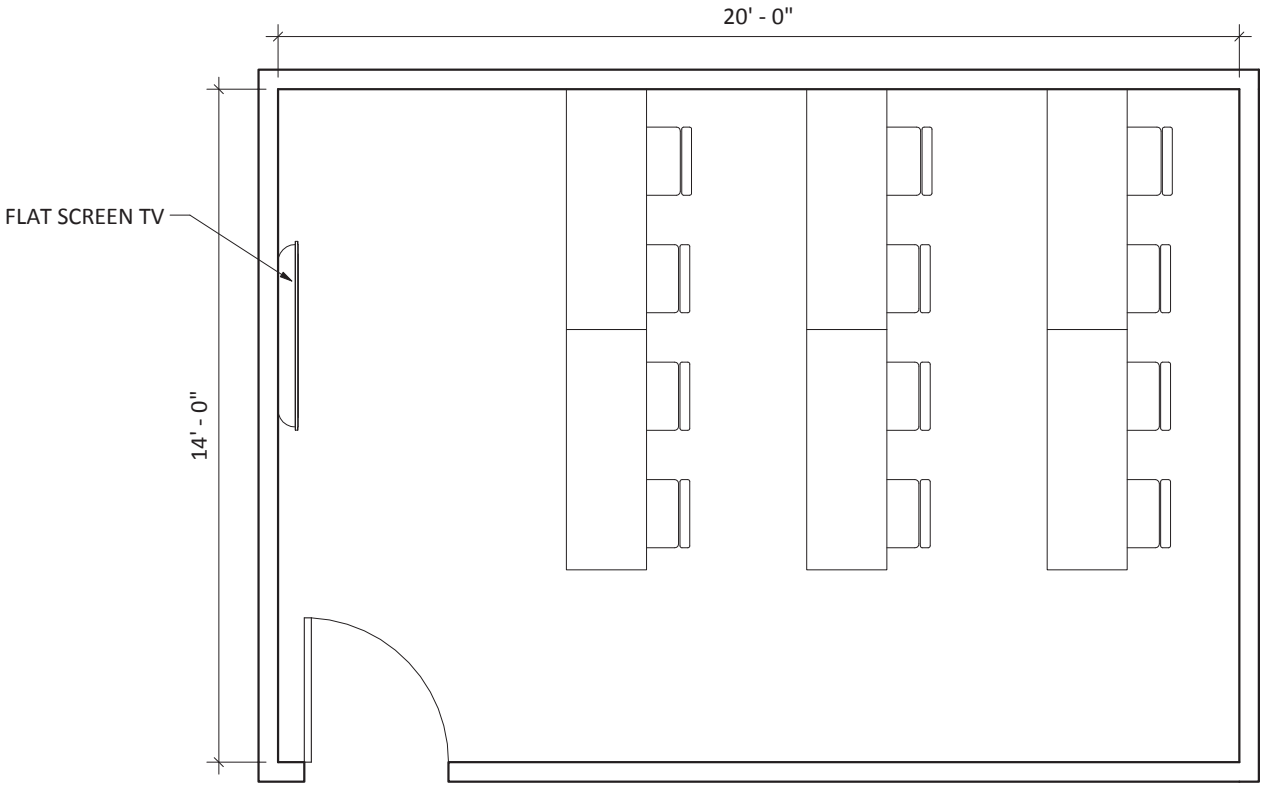

IT TRAINING / CONFERENCE ROOM
1/4" = 1'-0"

Veterans Services Space Needs

3.1 VETERANS SERVICES OFFICER

Adjacency Requirement	Access from Veterans Services / Waiting
Public Access	High
Security Requirements	Moderate
Contract Millwork / Equipment	None
Floor	Carpet tile
Walls	GWB, painted
Ceiling	ACT
Lighting / Electrical	LED
HVAC / Plumbing	A/C
Special Needs	None
Owner supplied Furn. / Equip.	Office desk w/ overhead shelving & chair, lateral files, round table & chairs, coat cabinet, bookcase, printer

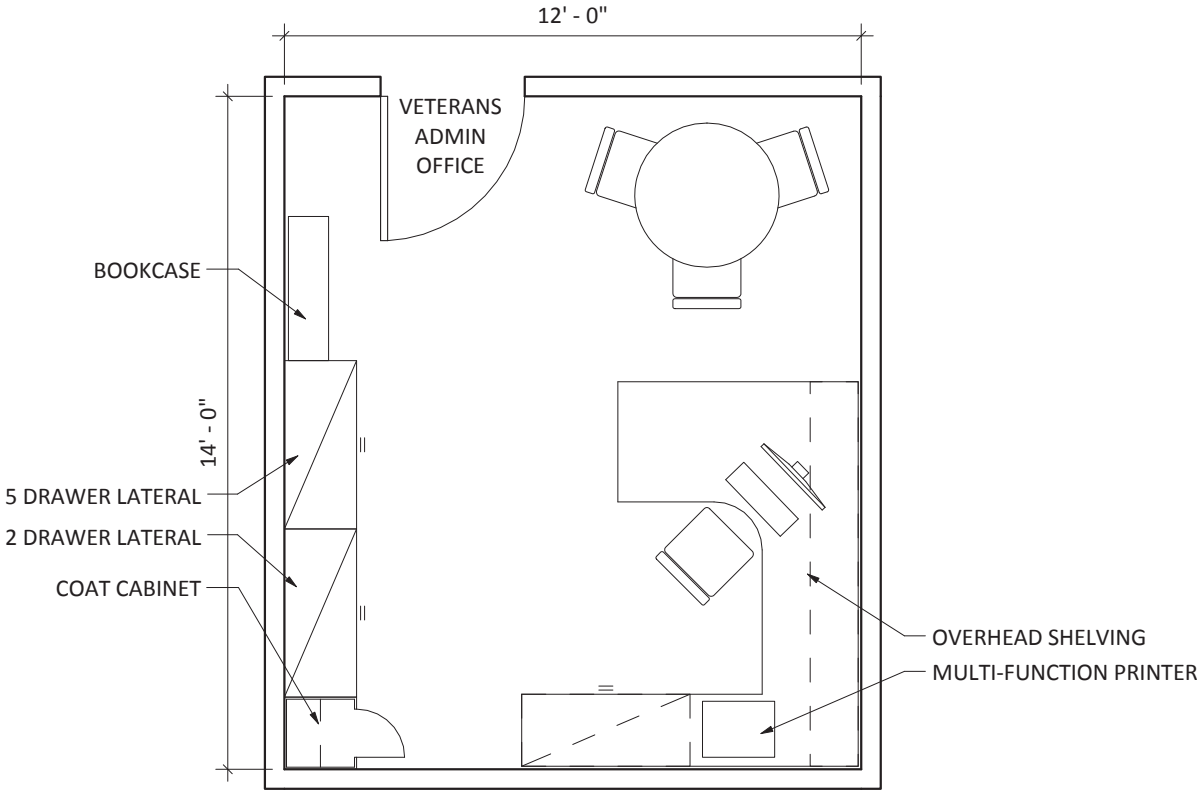

VETERANS SERVICES OFFICER
1/4" = 1'-0"

3.2 VETERANS SERVICES / WAITING

Adjacency Requirement	Adjacent to Veterans Services Officer
Public Access	High
Security Requirements	Moderate
Contract Millwork / Equipment	Work counter, pamphlet case
Floor	Carpet tile
Walls	GWB, painted
Ceiling	ACT
Lighting / Electrical	LED
HVAC / Plumbing	A/C
Special Needs	None
Owner supplied Furn. / Equip.	Office desk w/ overhead shelving & chair, lateral file, guest chairs, printer, coffee machine

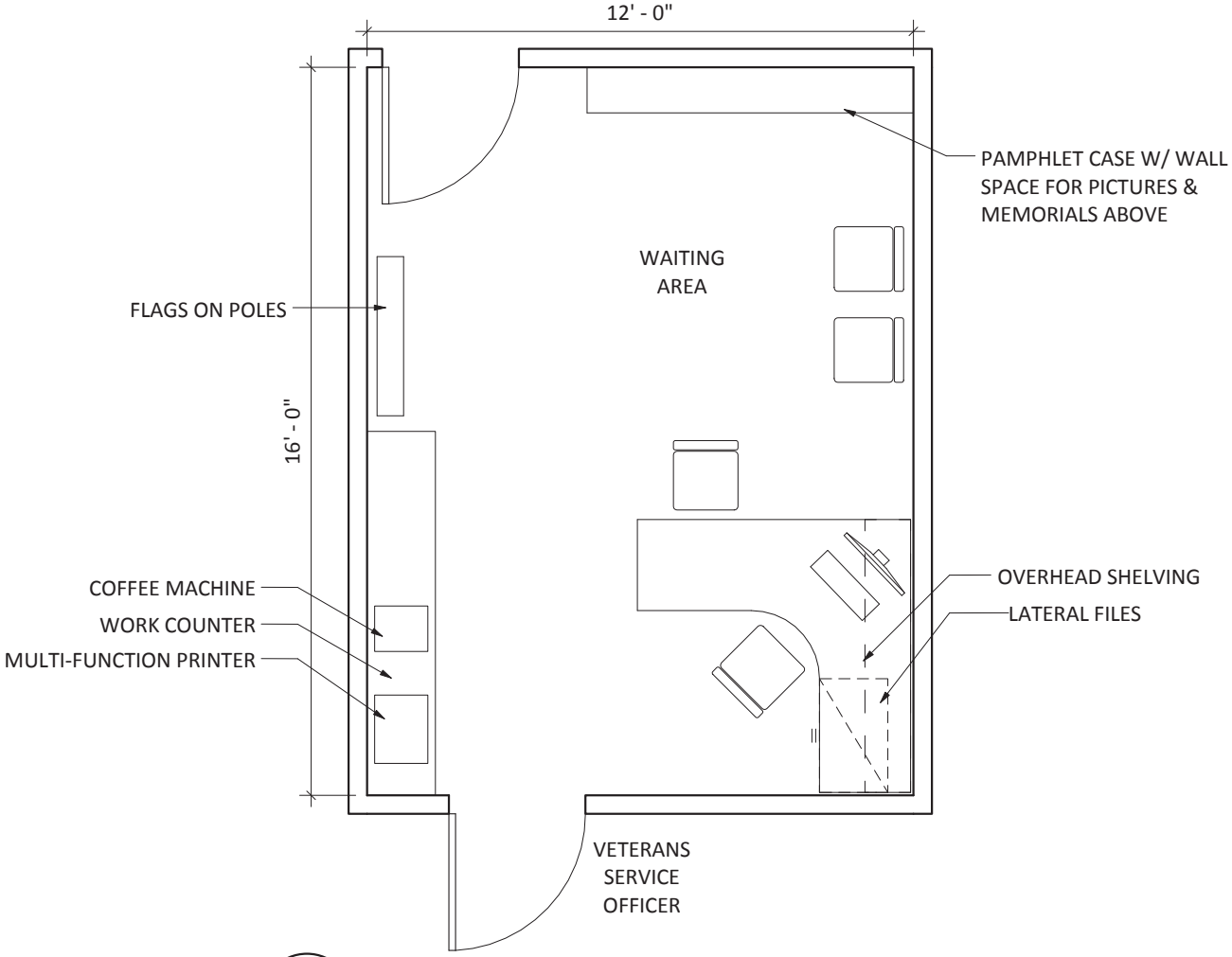

VETERANS SERVICES / WAITING
1/4" = 1'-0"

3.3 VETERANS STORAGE

Adjacency Requirement	None
Public Access	None
Security Requirements	Moderate
Contract Millwork / Equipment	None
Floor	Resilient flooring
Walls	GWB, painted
Ceiling	ACT
Lighting / Electrical	LED
HVAC / Plumbing	A/C
Special Needs	None
Owner supplied Furn. / Equip.	Lateral files, storage cabinet

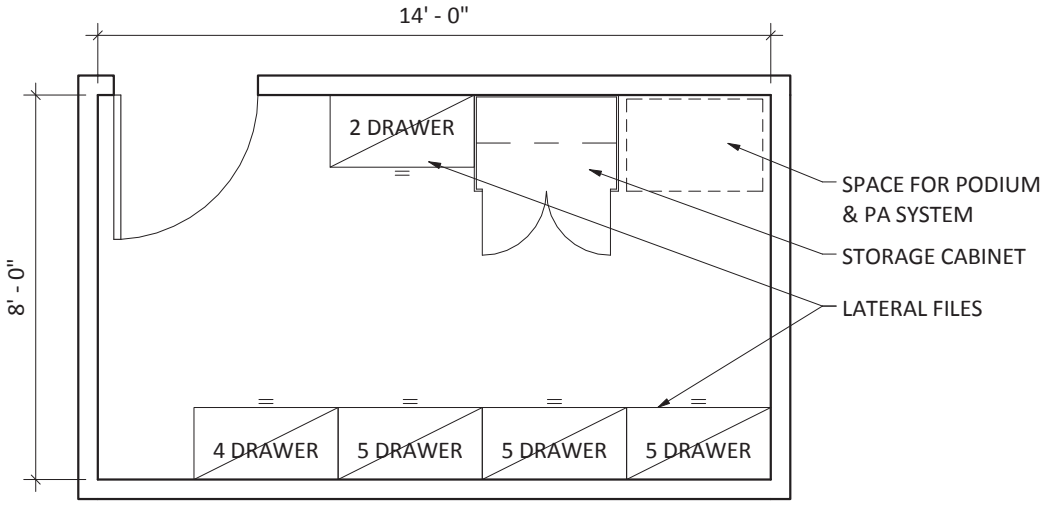

VETERANS STORAGE
1/4" = 1'-0"

Facilities Dept. Space Needs

4.1 FACILITIES DIRECTOR OFFICE

Adjacency Requirement	Access from Facilities Admin Office
Public Access	Moderate
Security Requirements	Moderate
Contract Millwork / Equipment	None
Floor	Carpet tile
Walls	GWB, painted
Ceiling	ACT
Lighting / Electrical	LED
HVAC / Plumbing	A/C
Special Needs	None
Owner supplied Furn. / Equip.	Office desk w/ overhead shelving & chair, lateral files, guest chairs, coat cabinet, plan table

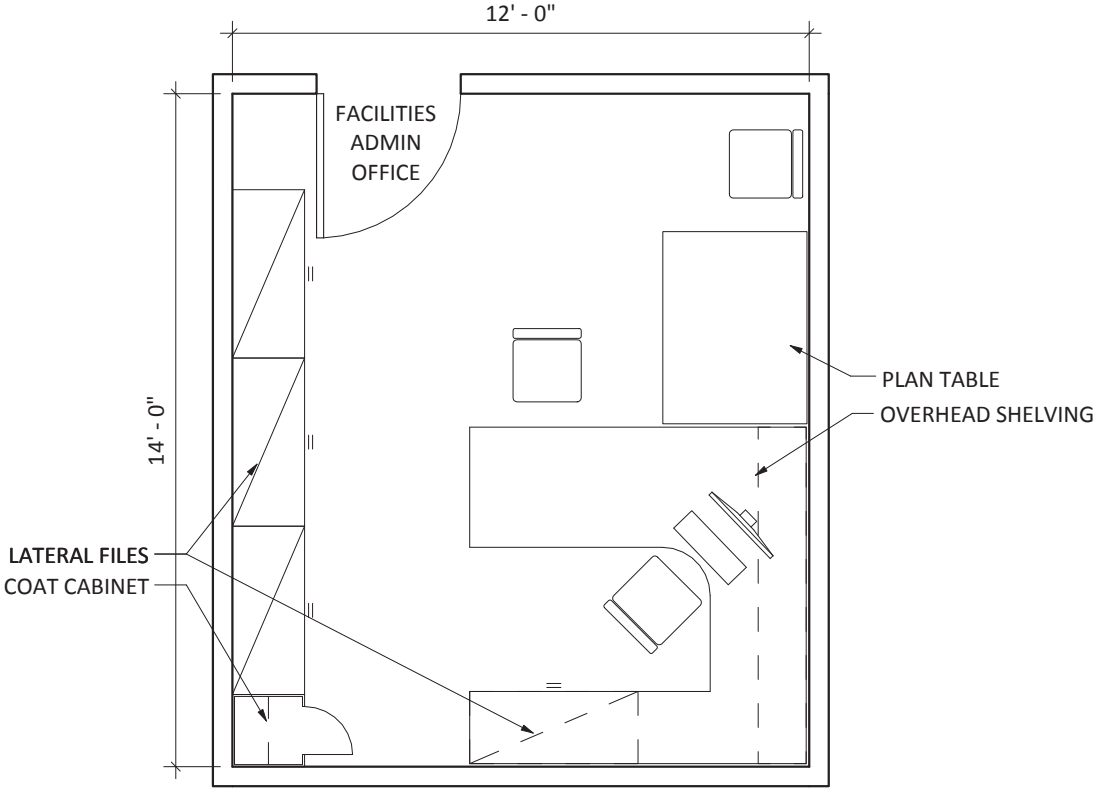

FACILITIES DIRECTOR OFFICE
1/4" = 1'-0"

4.2 FACILITIES ADMIN OFFICE

Adjacency Requirement	Adjacent to Facilities Director Office & Facilities Staff Office
Public Access	Moderate
Security Requirements	Moderate
Contract Millwork / Equipment	Workcounter
Floor	Carpet tile
Walls	GWB, painted
Ceiling	ACT
Lighting / Electrical	LED
HVAC / Plumbing	A/C
Special Needs	None
Owner supplied Furn. / Equip.	Office desk w/ overhead shelving & chair, lateral files, guest chairs, printer

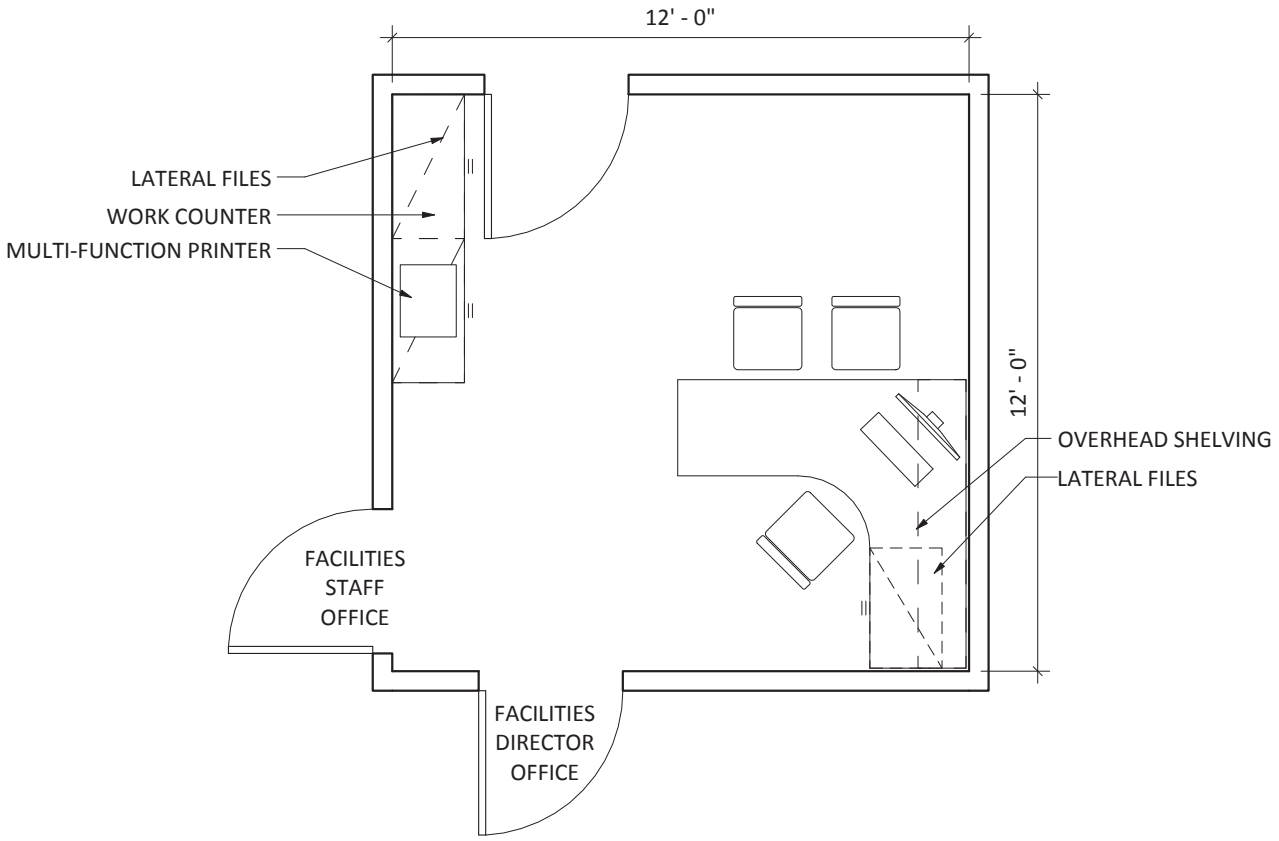

FACILITIES ADMIN OFFICE
1/4" = 1'-0"

4.3 FACILITIES ADMIN STORAGE

Adjacency Requirement	None
Public Access	None
Security Requirements	Moderate
Contract Millwork / Equipment	None
Floor	Resilient flooring
Walls	GWB, painted
Ceiling	ACT
Lighting / Electrical	LED
HVAC / Plumbing	A/C
Special Needs	None
Owner supplied Furn. / Equip.	Flat plan files, lateral files

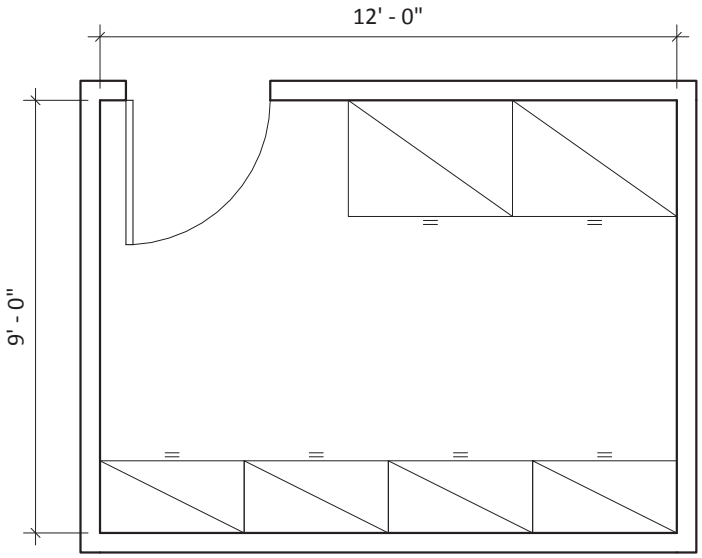

FACILITIES ADMIN STORAGE
1/4" = 1'-0"

4.4 FACILITIES STAFF OFFICE

Adjacency Requirement	Access from Facilities Admin Office
Public Access	Moderate
Security Requirements	Moderate
Contract Millwork / Equipment	None
Floor	Carpet tile
Walls	GWB, painted
Ceiling	ACT
Lighting / Electrical	LED
HVAC / Plumbing	A/C
Special Needs	None
Owner supplied Furn. / Equip.	Office desk w/ chair, overhead shelving, lateral file

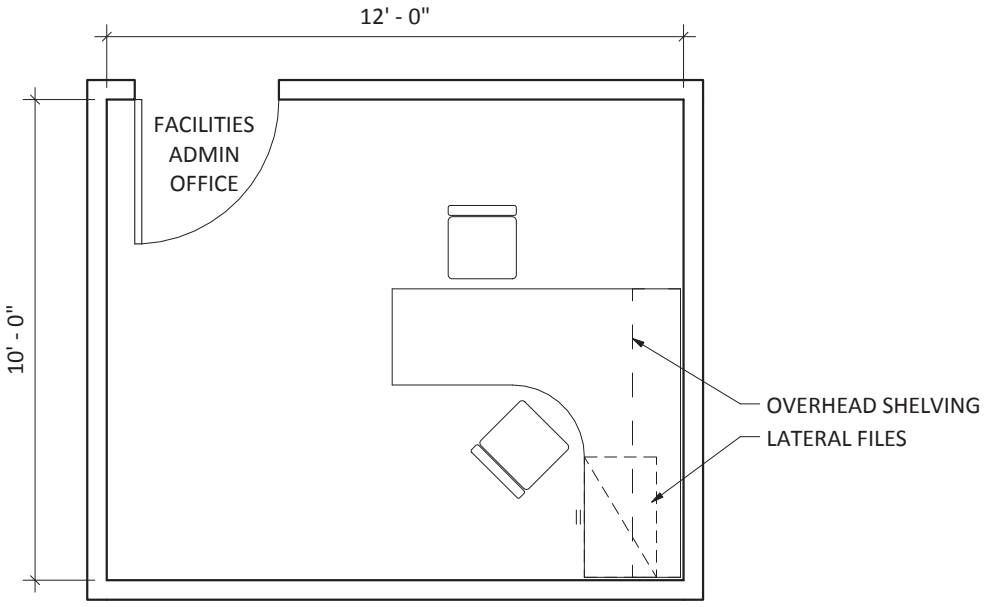

FACILITIES STAFF OFFICE
1/4" = 1'-0"

Building Support Space Needs

5.1 PASSENGER ELEVATOR

Adjacency Requirement	Near Public Lobby
Public Access	High
Security Requirements	Low
Contract Millwork / Equipment	None
Floor	Resilient flooring
Walls	Metal panels, by manufacturer
Ceiling	Metal panels, by manufacturer
Lighting / Electrical	LED
HVAC / Plumbing	None
Special Needs	None
Owner supplied Furn. / Equip.	None

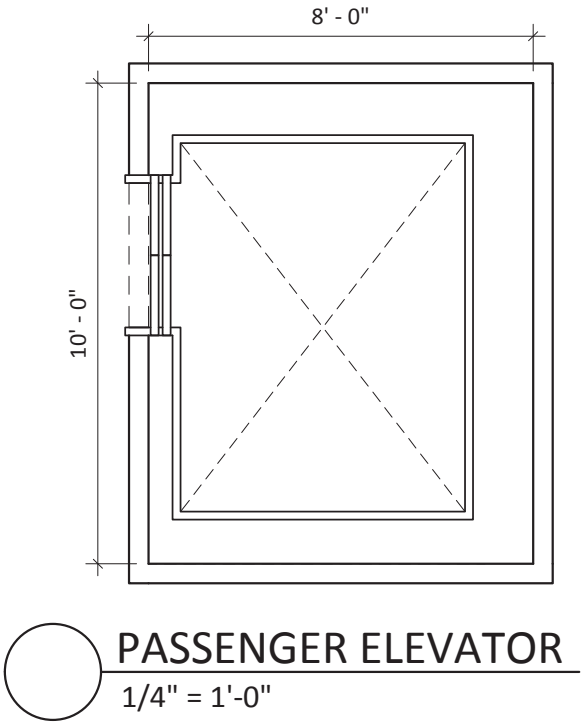

5.2 ELEVATOR MACHINE ROOM

Adjacency Requirement	Adjacent to Passenger Elevator
Public Access	None
Security Requirements	Moderate
Contract Millwork / Equipment	None
Floor	Resilient flooring
Walls	GWB, painted
Ceiling	Exposed
Lighting / Electrical	LED, utility
HVAC / Plumbing	A/C
Special Needs	None
Owner supplied Furn. / Equip.	None

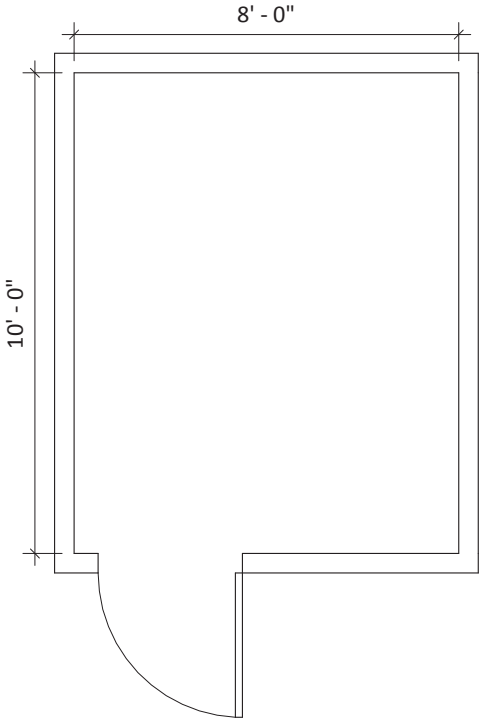

ELEVATOR MACHINE ROOM
1/4" = 1'-0"

5.3 BOILER ROOM

Adjacency Requirement	Centrally located
Public Access	None
Security Requirements	Moderate
Contract Millwork / Equipment	None
Floor	Concrete w/ hardener
Walls	GWB, painted
Ceiling	Exposed
Lighting / Electrical	LED, utility / Coordinate w/ equipment
HVAC / Plumbing	As required for equipment
Special Needs	None
Owner supplied Furn. / Equip.	None

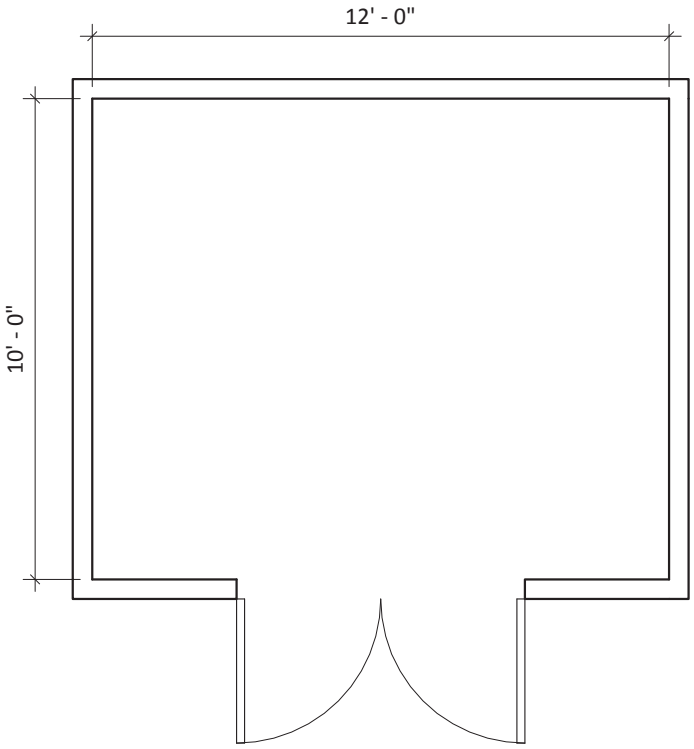

BOILER ROOM
1/4" = 1'-0"

5.4 ELECTRICAL ROOM

Adjacency Requirement	Centrally located
Public Access	None
Security Requirements	Moderate
Contract Millwork / Equipment	None
Floor	Concrete w/ hardener
Walls	GWB, painted, plywood on all walls
Ceiling	Exposed
Lighting / Electrical	LED, utility
HVAC / Plumbing	None
Special Needs	None
Owner supplied Furn. / Equip.	None

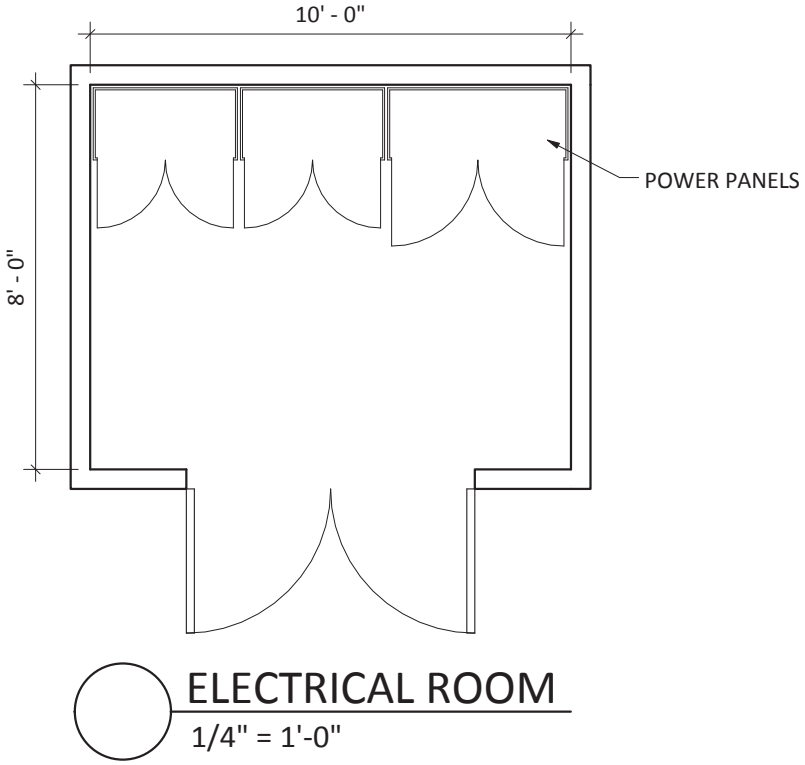

5.5 EMERGENCY GENERATOR TRANSFER SWITCH

Adjacency Requirement	Adjacent to Electrical Room
Public Access	None
Security Requirements	Moderate
Contract Millwork / Equipment	None
Floor	Concrete w/ hardener
Walls	GWB, painted, plywood panels on all walls
Ceiling	Exposed
Lighting / Electrical	LED, utility
HVAC / Plumbing	None
Special Needs	2-hour rated
Owner supplied Furn. / Equip.	None

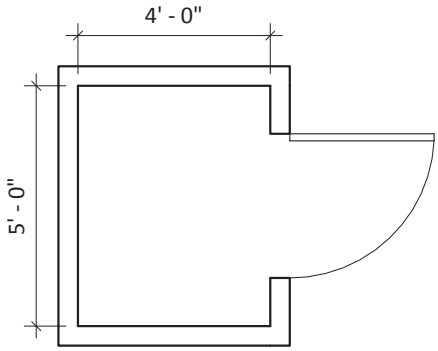

EMERG. GENERATOR TRANSFER SWITCH
1/4" = 1'-0"

5.6 SPRINKLER / WATER SERVICE

Adjacency Requirement	None
Public Access	None
Security Requirements	Moderate
Contract Millwork / Equipment	None
Floor	Concrete w/ hardener
Walls	GWB, painted
Ceiling	Exposed
Lighting / Electrical	LED, utility
HVAC / Plumbing	As required for equipment
Special Needs	None
Owner supplied Furn. / Equip.	None

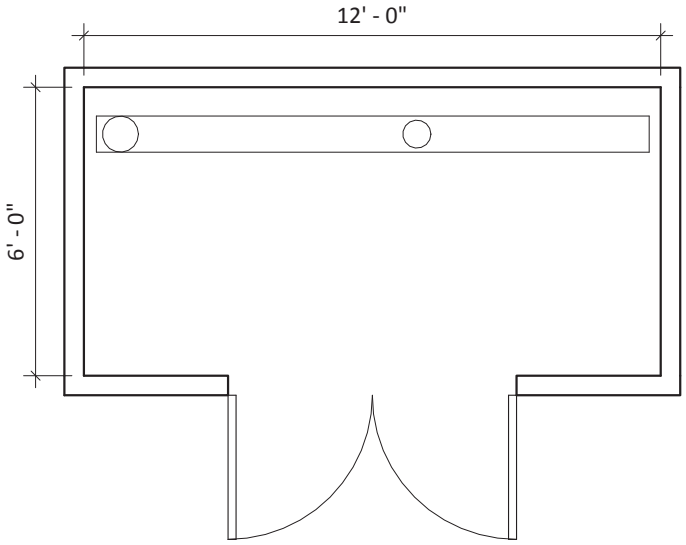

SPRINKLER / WATER SERVICE
1/4" = 1'-0"

5.7 JANITOR'S CLOSET

Adjacency Requirement	Centrally located, one on each floor
Public Access	None
Security Requirements	Low
Contract Millwork / Equipment	Mop rack, overhead shelf
Floor	Ceramic tile
Walls	GWB, painted, stainless stell splash guards around sink
Ceiling	ACT
Lighting / Electrical	LED, utility
HVAC / Plumbing	Exhaust only / Floor sink, wall faucet
Special Needs	None
Owner supplied Furn. / Equip.	None

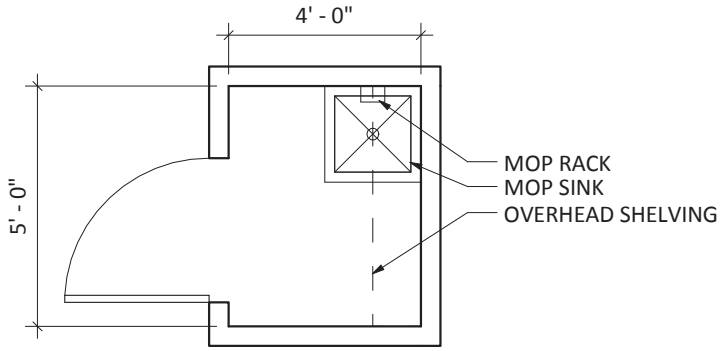

JANITOR CLOSET
1/4" = 1'-0"

APPENDICES

B. Concept Design Studies

WESTFORD NEW CENTER BUILDING
OPTION A

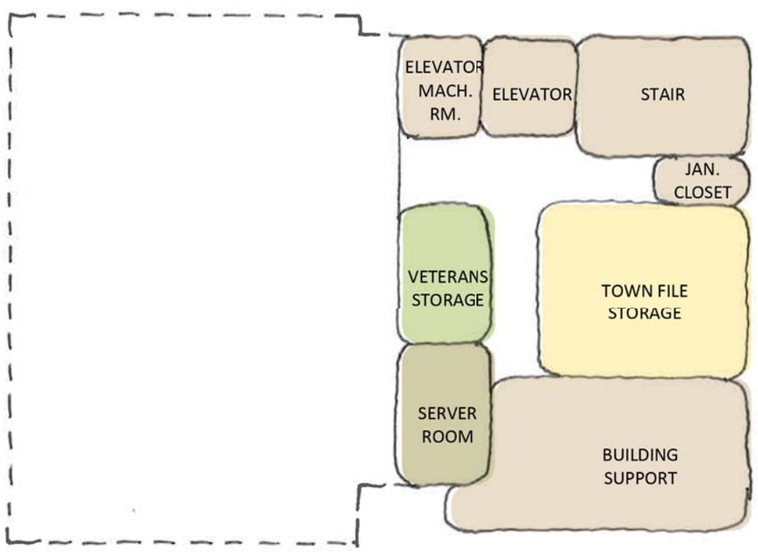

BASEMENT

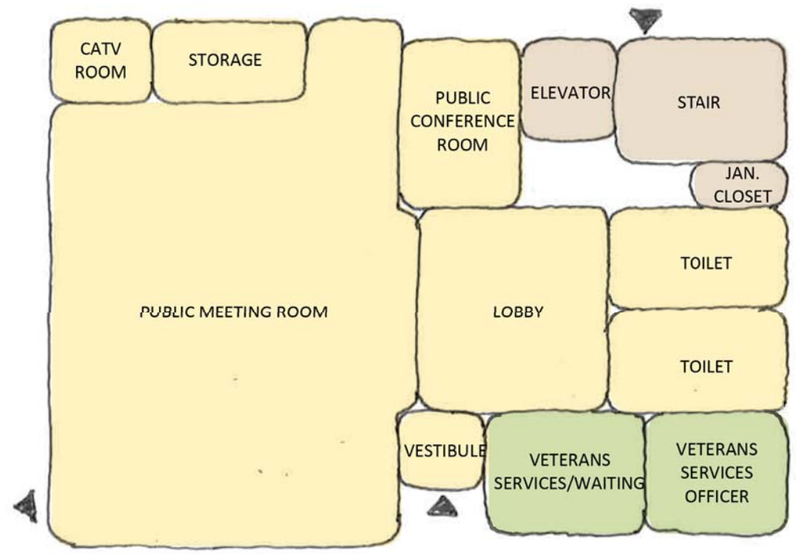

FIRST FLOOR

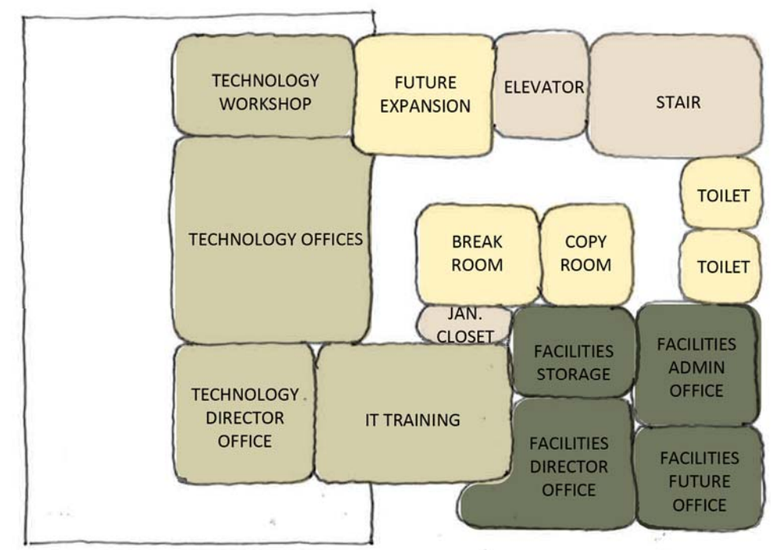

SECOND FLOOR

- PUBLIC & SHARED SPACES
- TECHNOLOGY DEPARTMENT
- VETERANS SERVICES
- FACILITIES DEPARTMENT
- BUILDING SUPPORT

context ARCHITECTURE

November 30, 2017

WESTFORD NEW CENTER BUILDING
OPTION B

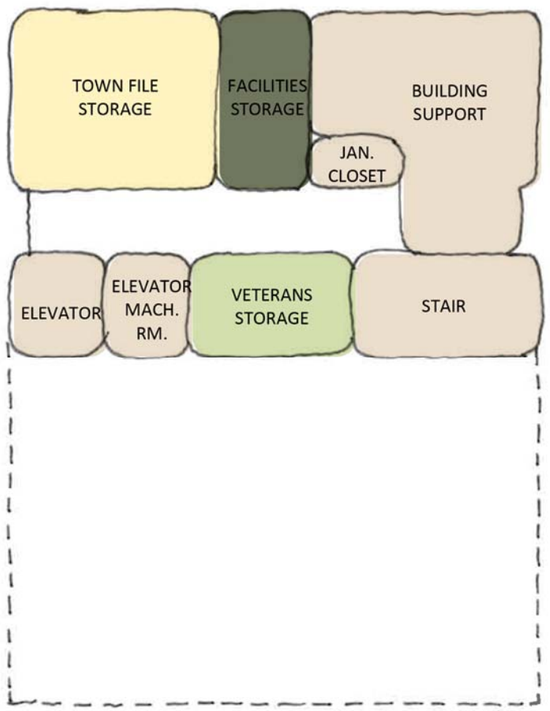

BASEMENT

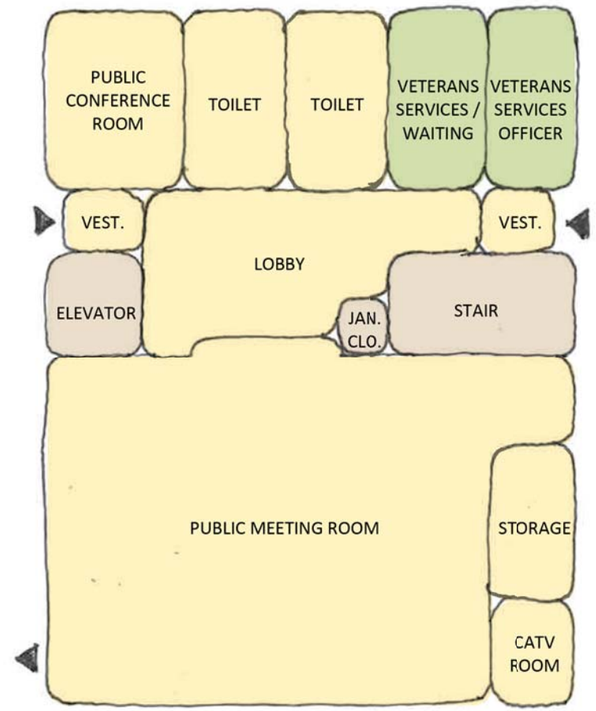

FIRST FLOOR

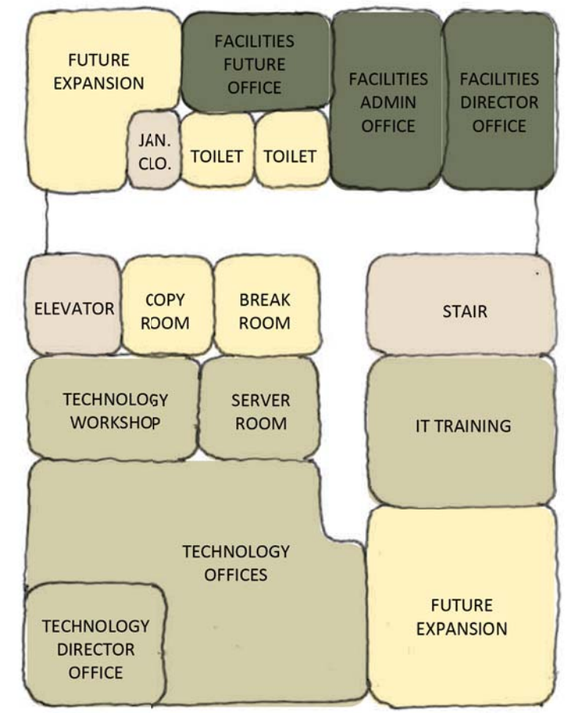

SECOND FLOOR

- PUBLIC & SHARED SPACES
- TECHNOLOGY DEPARTMENT
- VETERANS SERVICES
- FACILITIES DEPARTMENT
- BUILDING SUPPORT

context ARCHITECTURE

November 30, 2017

WESTFORD NEW CENTER BUILDING

BUILDING OPTION A

80′ x 50′

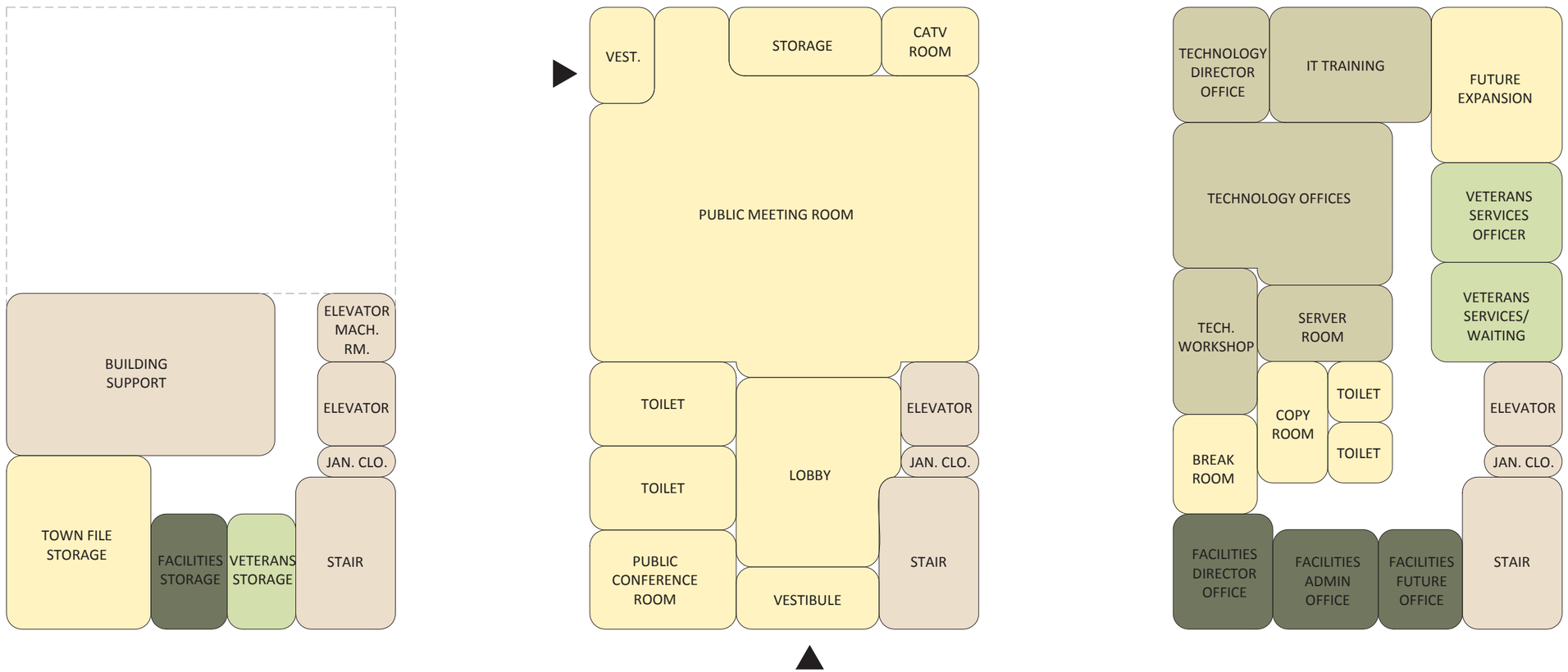

BASEMENT

FIRST FLOOR

SECOND FLOOR

- PUBLIC & SHARED SPACES
- TECHNOLOGY DEPARTMENT
- VETERANS SERVICES
- FACILITIES DEPARTMENT
- BUILDING SUPPORT

context ARCHITECTURE

December 14, 2017

WESTFORD NEW CENTER BUILDING

BUILDING OPTION B

75′ x 54′

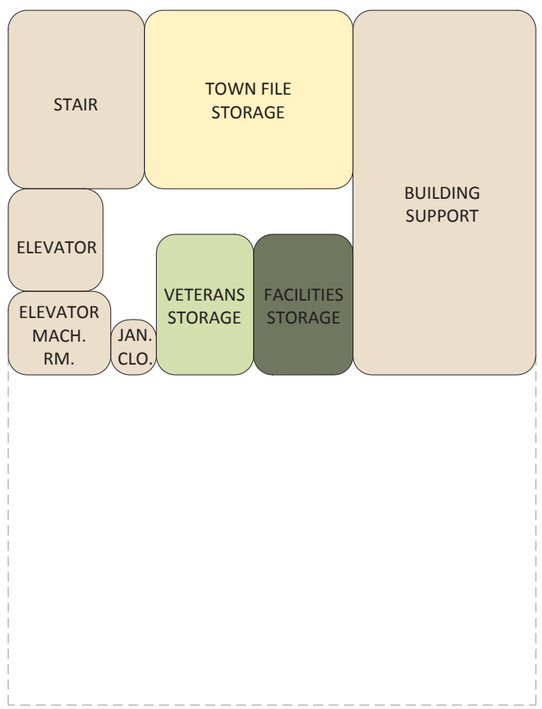

BASEMENT

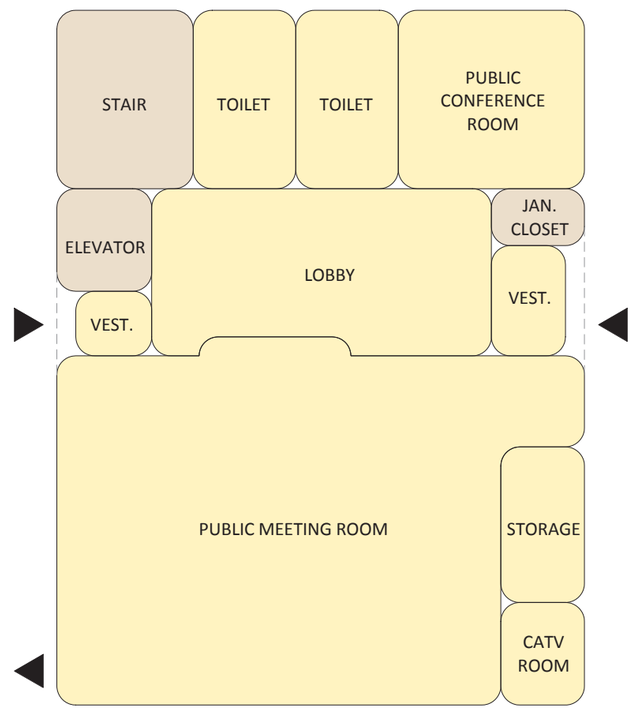

FIRST FLOOR

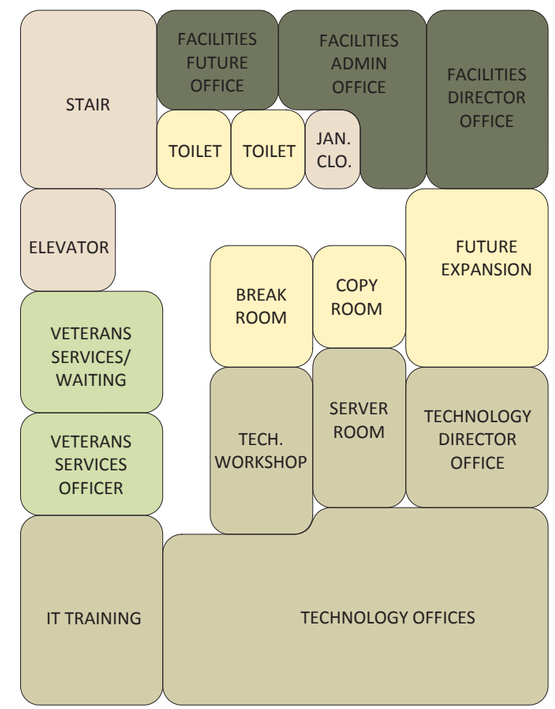

SECOND FLOOR

- PUBLIC & SHARED SPACES
- TECHNOLOGY DEPARTMENT
- VETERANS SERVICES
- FACILITIES DEPARTMENT
- BUILDING SUPPORT

context ARCHITECTURE

December 14, 2017

WESTFORD NEW CENTER BUILDING

SITE OPTION 1

context ARCHITECTURE

CBA | Landscape Architects LLC
24 THORNDIKE STREET | CAMBRIDGE MA 02141
phone 617.945.9760 | www.cbaland.com | cba@cbaland.com
landscape architecture | urban design | master planning

December 14, 2017

WESTFORD NEW CENTER BUILDING

SITE OPTION 2

context ARCHITECTURE

CBA | Landscape Architects LLC
24 THORNDIKE STREET | CAMBRIDGE MA 02141
phone 617.945.9760 | www.cbaland.com | cba@cbaland.com
landscape architecture | urban design | master planning

December 14, 2017

WESTFORD NEW CENTER BUILDING

SITE OPTION 3

context ARCHITECTURE

CBA | Landscape Architects LLC
24 THORNDIKE STREET | CAMBRIDGE MA 02141
phone 617.945.9760 | www.cbaland.com | cba@cbaland.com
landscape architecture | urban design | master planning

December 14, 2017

WESTFORD NEW CENTER BUILDING

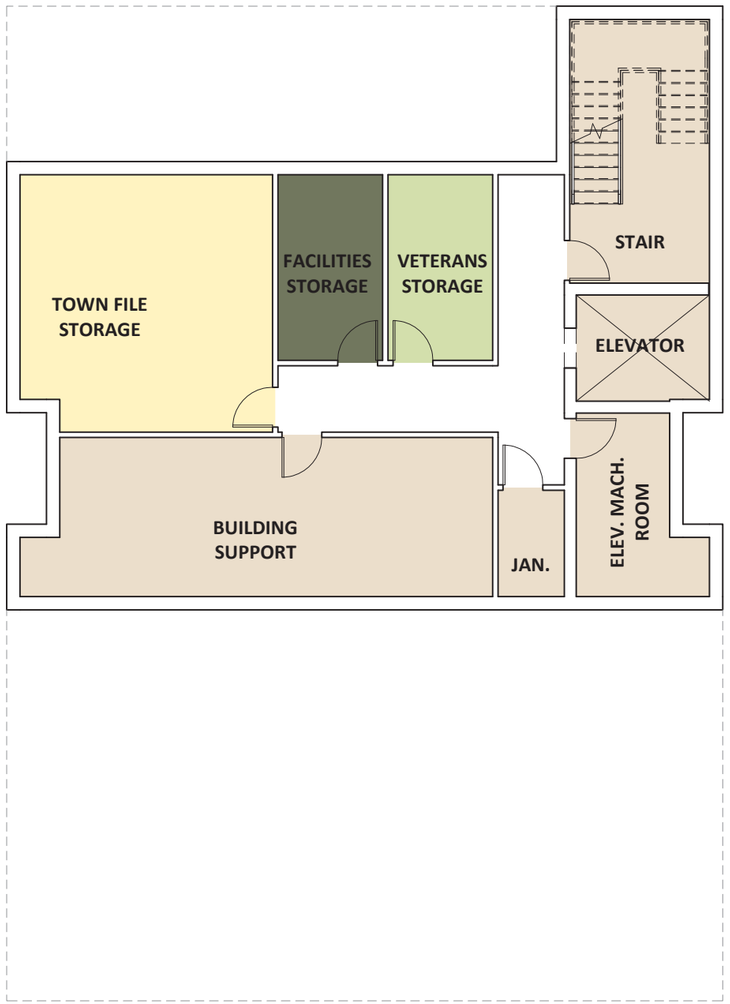

BASEMENT - 1,922 GSF

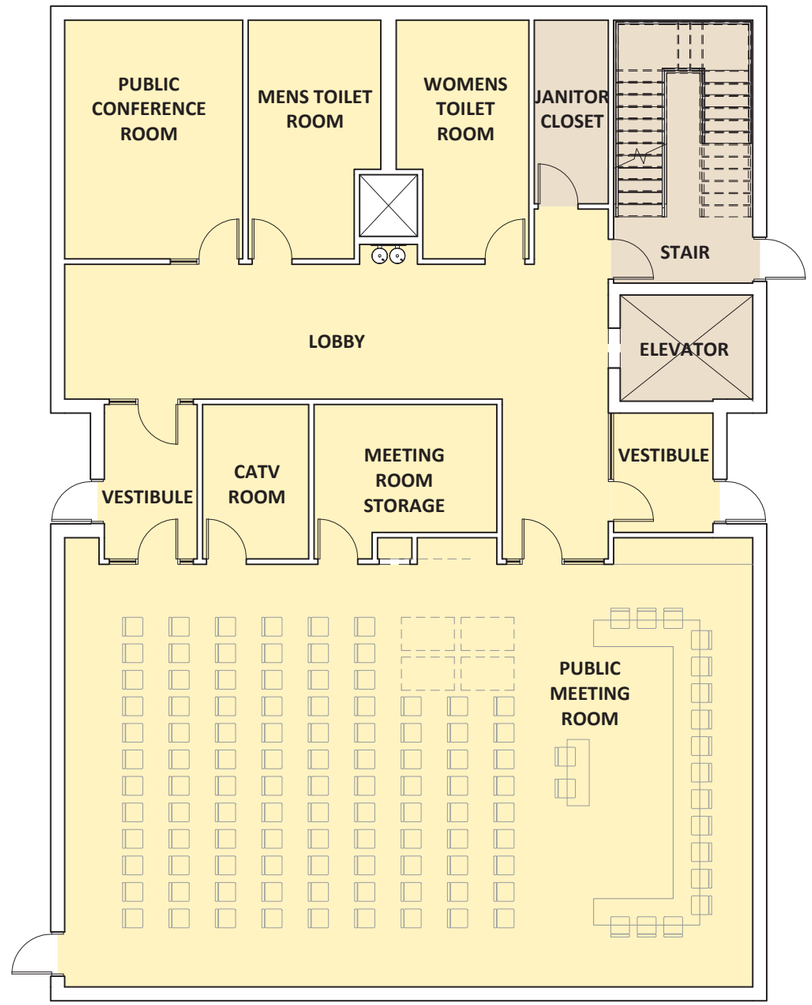

FIRST FLOOR - 4,000 GSF

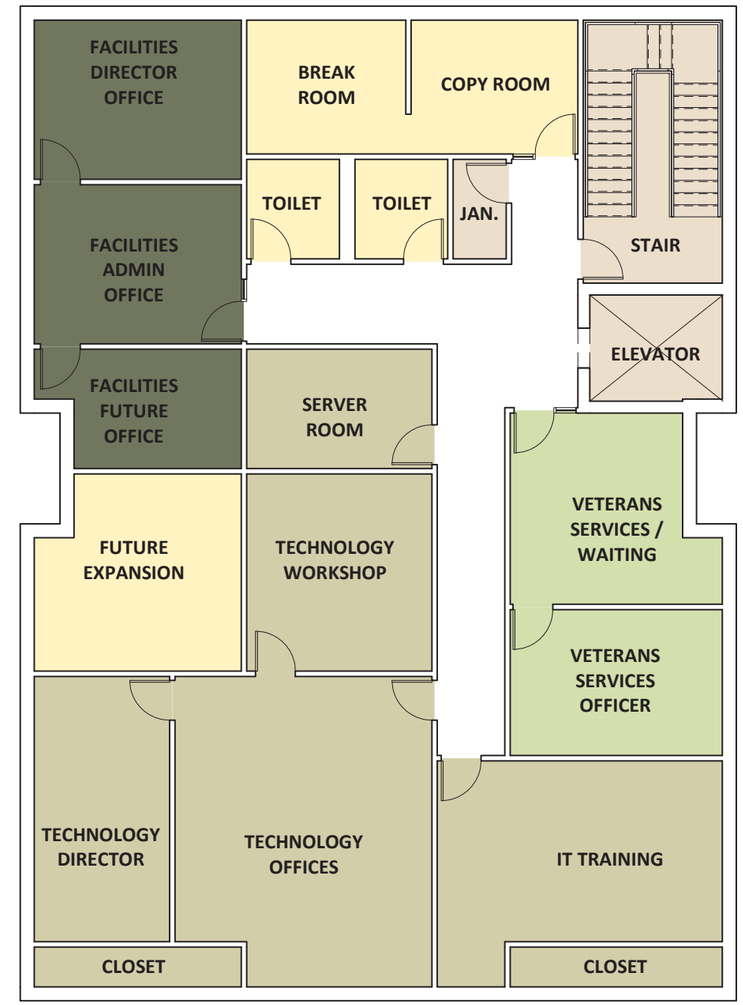

SECOND FLOOR - 4,000 GSF

- PUBLIC & SHARED SPACES
- TECHNOLOGY DEPARTMENT
- VETERANS SERVICES
- FACILITIES DEPARTMENT
- BUILDING SUPPORT

context ARCHITECTURE

January 11, 2018

WESTFORD NEW CENTER BUILDING

OPTION 1

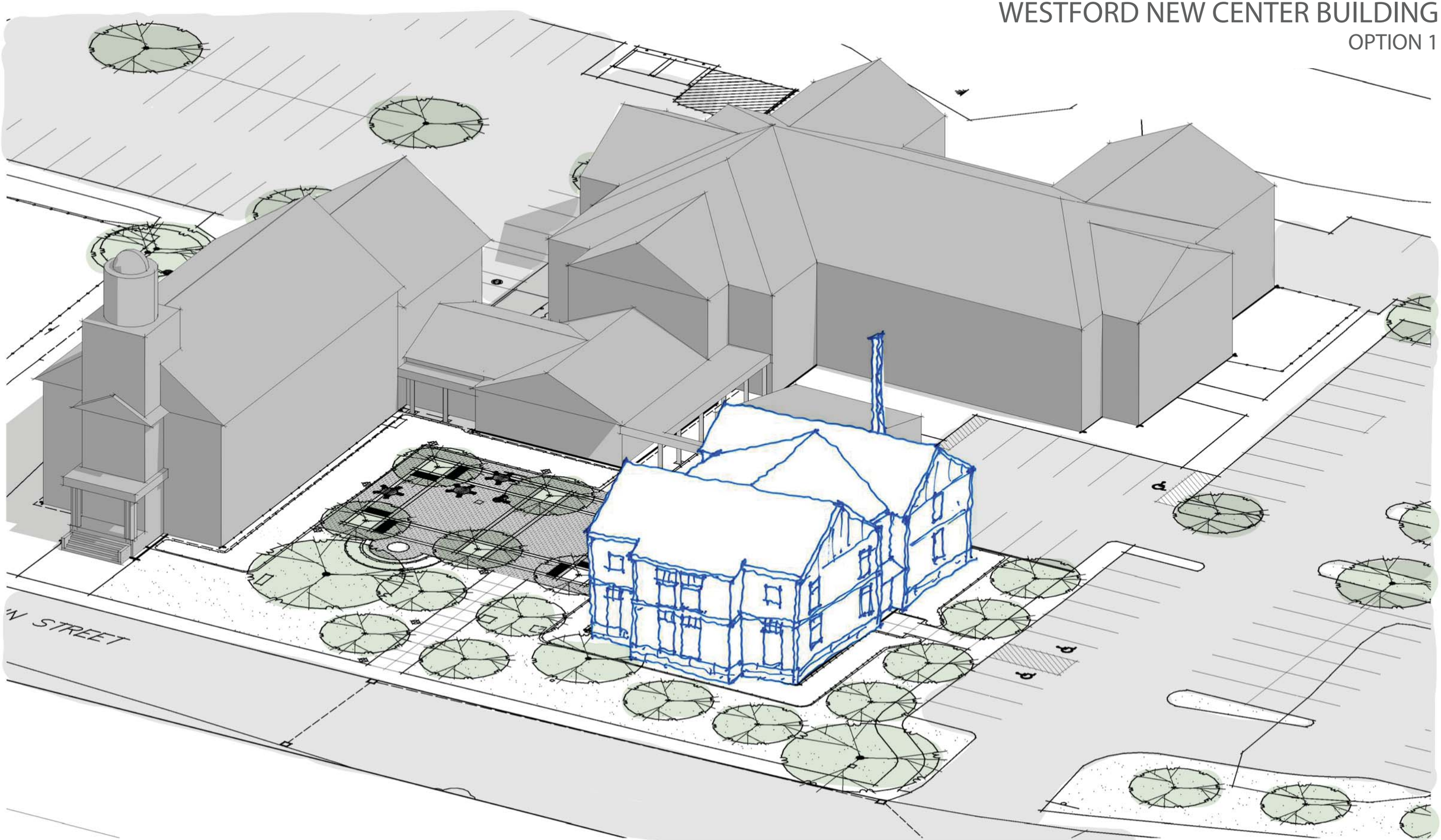

context
ARCHITECTURE

January 11, 2018

WESTFORD NEW CENTER BUILDING

OPTION 2

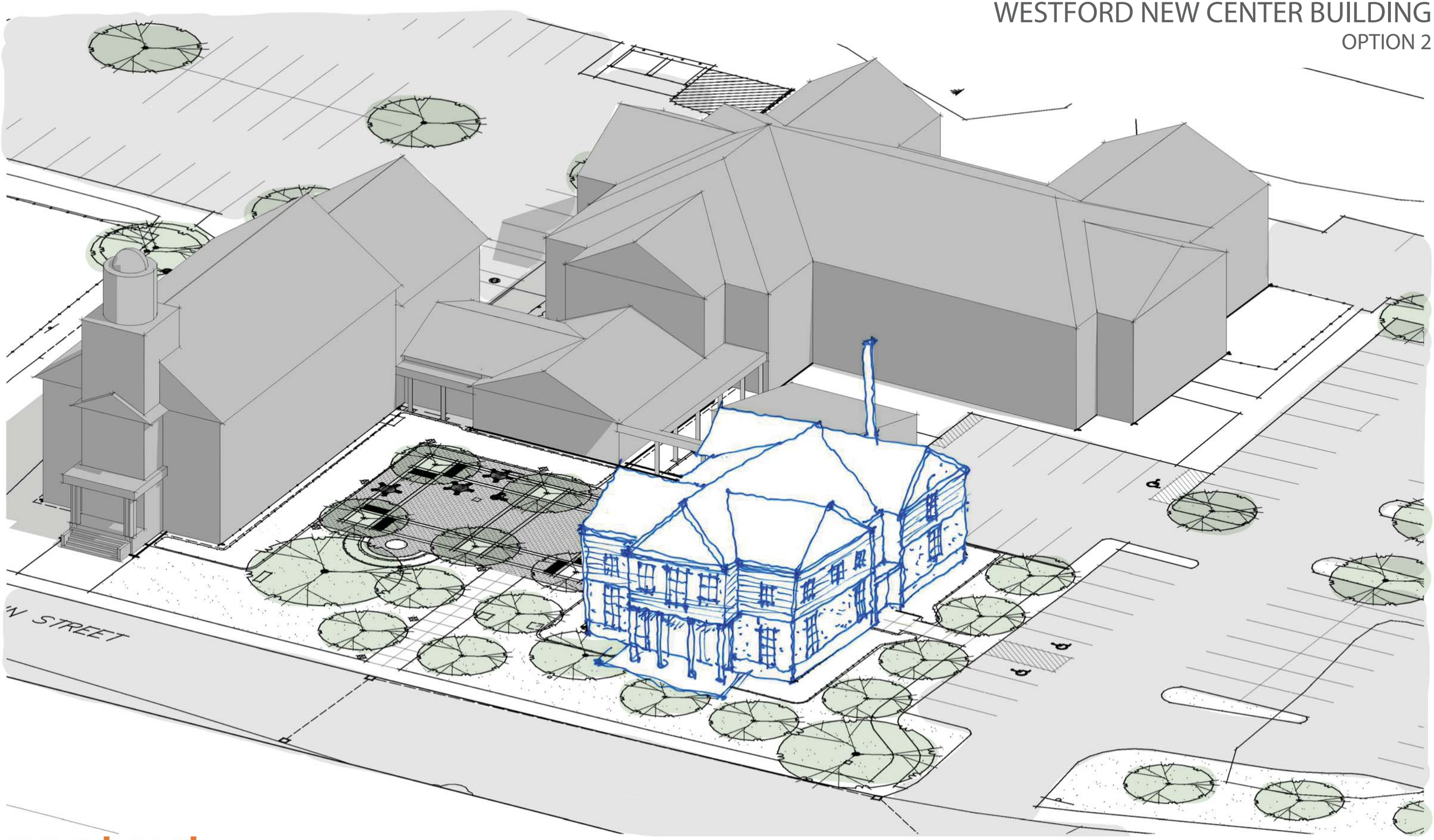

context
ARCHITECTURE

January 11, 2018

WESTFORD NEW CENTER BUILDING

OPTION 3

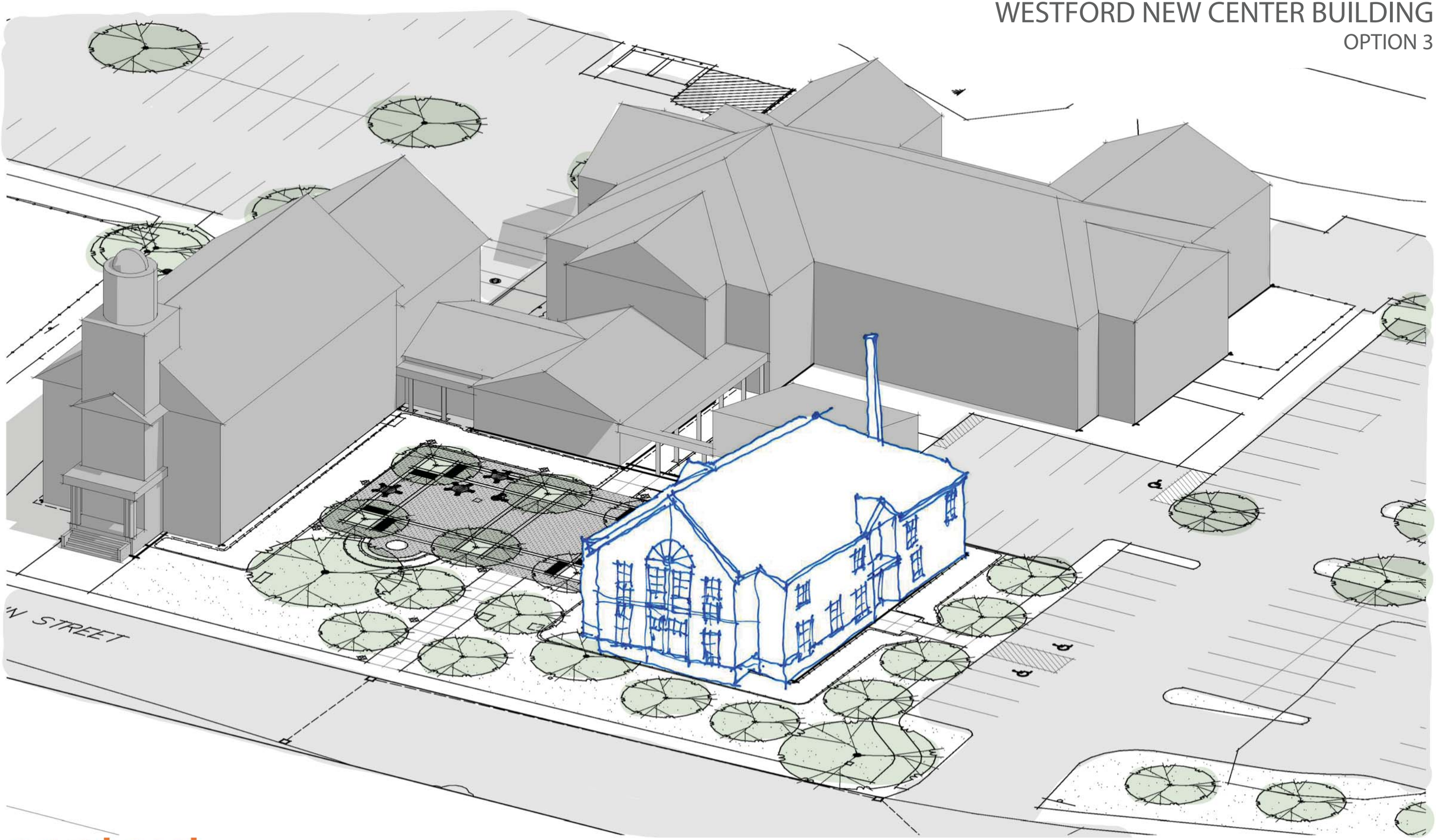

context
ARCHITECTURE

January 11, 2018

WESTFORD NEW CENTER BUILDING

REVISED SITE PLAN

EXISTING PARKING: 135

PROPOSED PARKING: 147

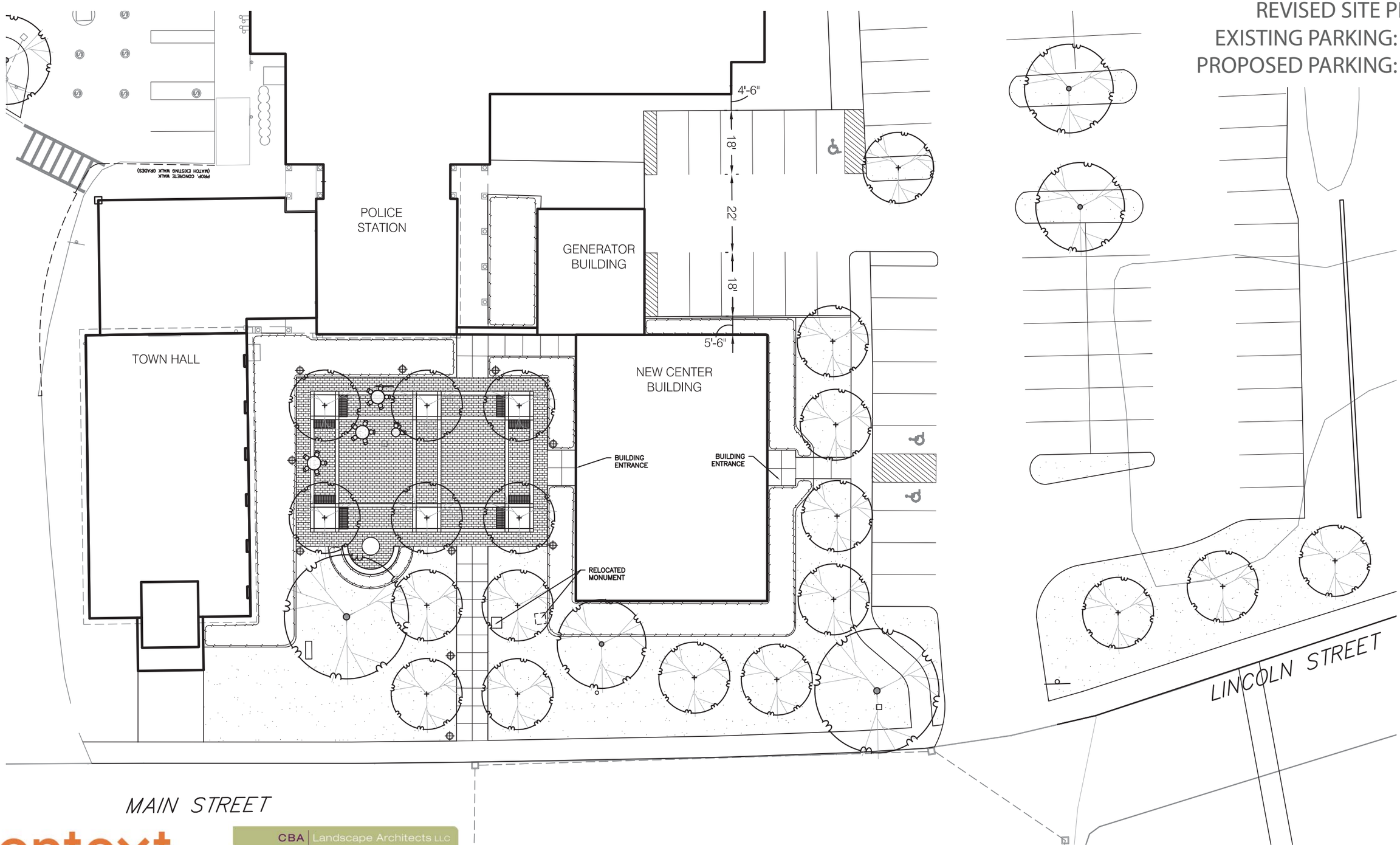

context
ARCHITECTURE

CBA | Landscape Architects LLC
24 THORNDIKE STREET | CAMBRIDGE MA 02141
phone 617.945.9760 | www.cbaland.com | cba@cbaland.com
landscape architecture | urban design | master planning

January 11, 2018

WESTFORD NEW CENTER BUILDING

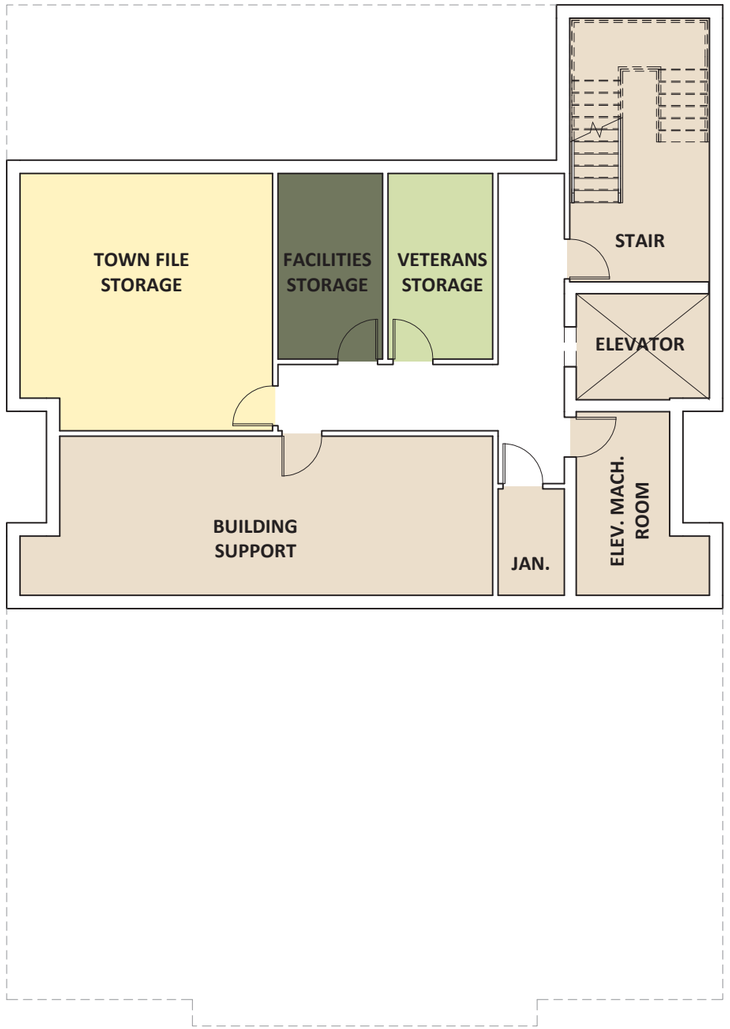

BASEMENT - 1,922 GSF

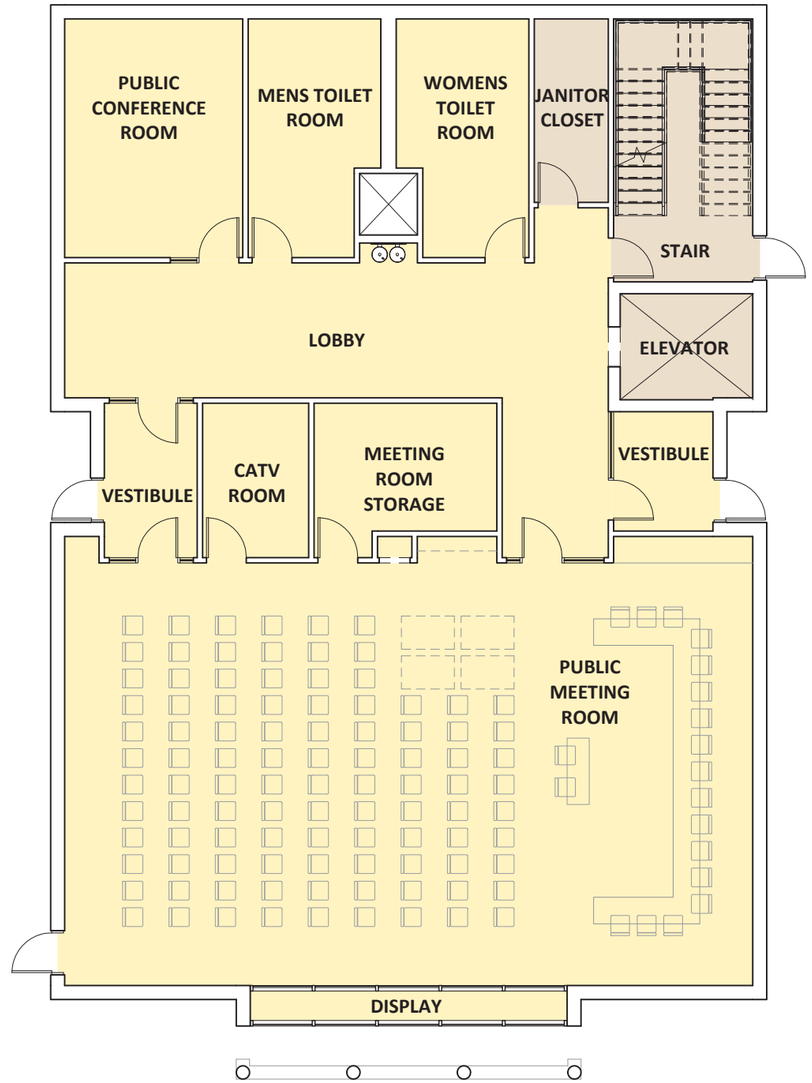

FIRST FLOOR - 4,052 GSF

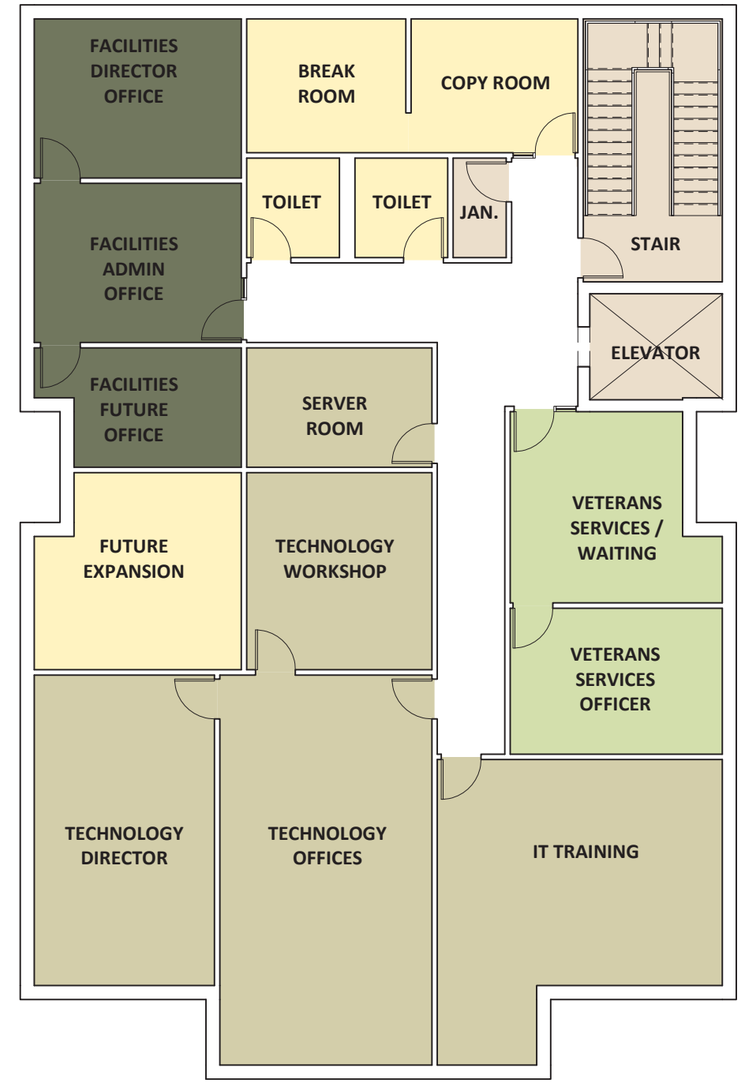

SECOND FLOOR - 4,156 GSF

PUBLIC & SHARED SPACES
TECHNOLOGY DEPARTMENT
VETERANS SERVICES
FACILITIES DEPARTMENT
BUILDING SUPPORT

context ARCHITECTURE

January 23, 2018

WESTFORD NEW CENTER BUILDING

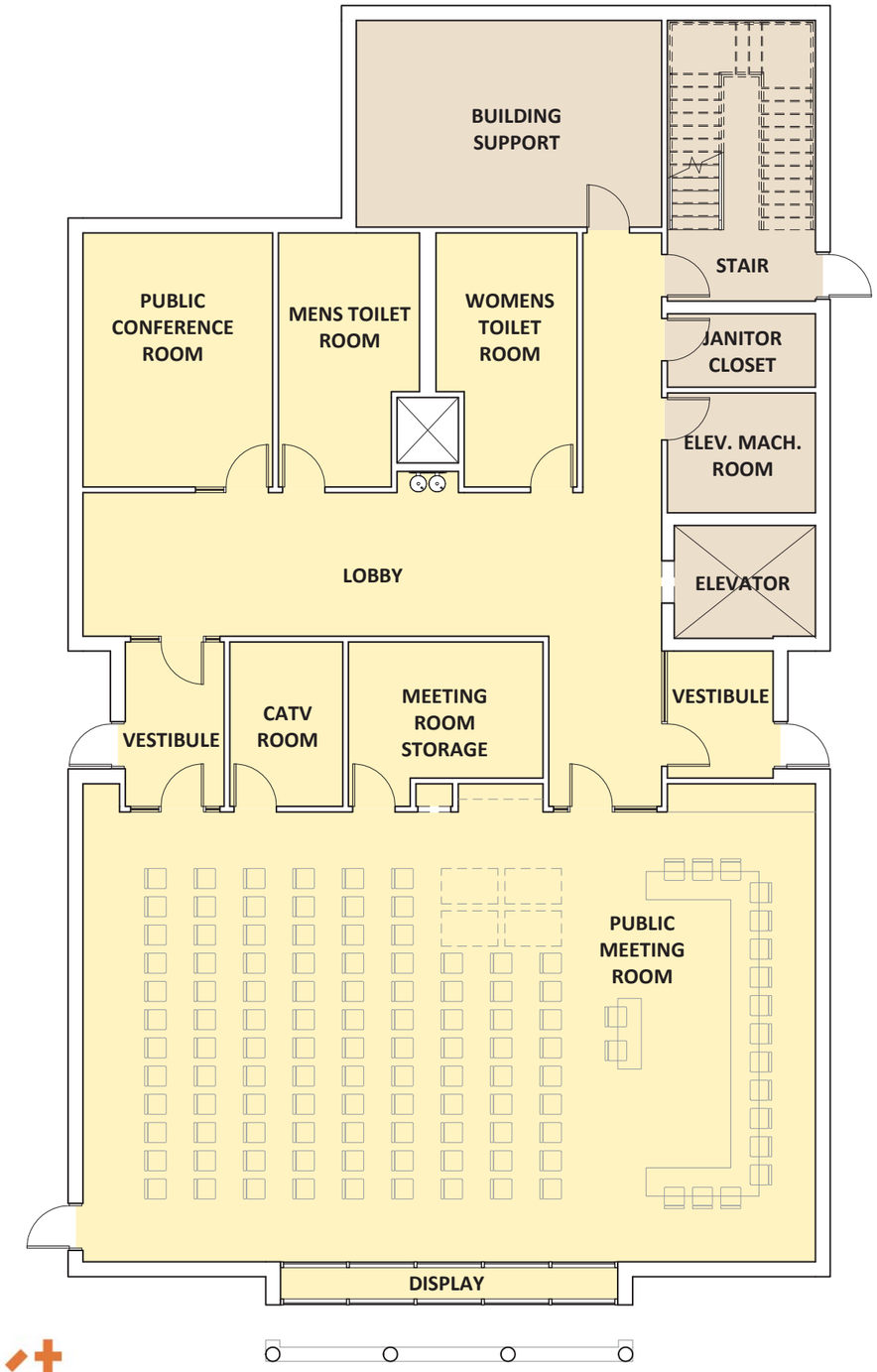

FIRST FLOOR - 4,573 GSF

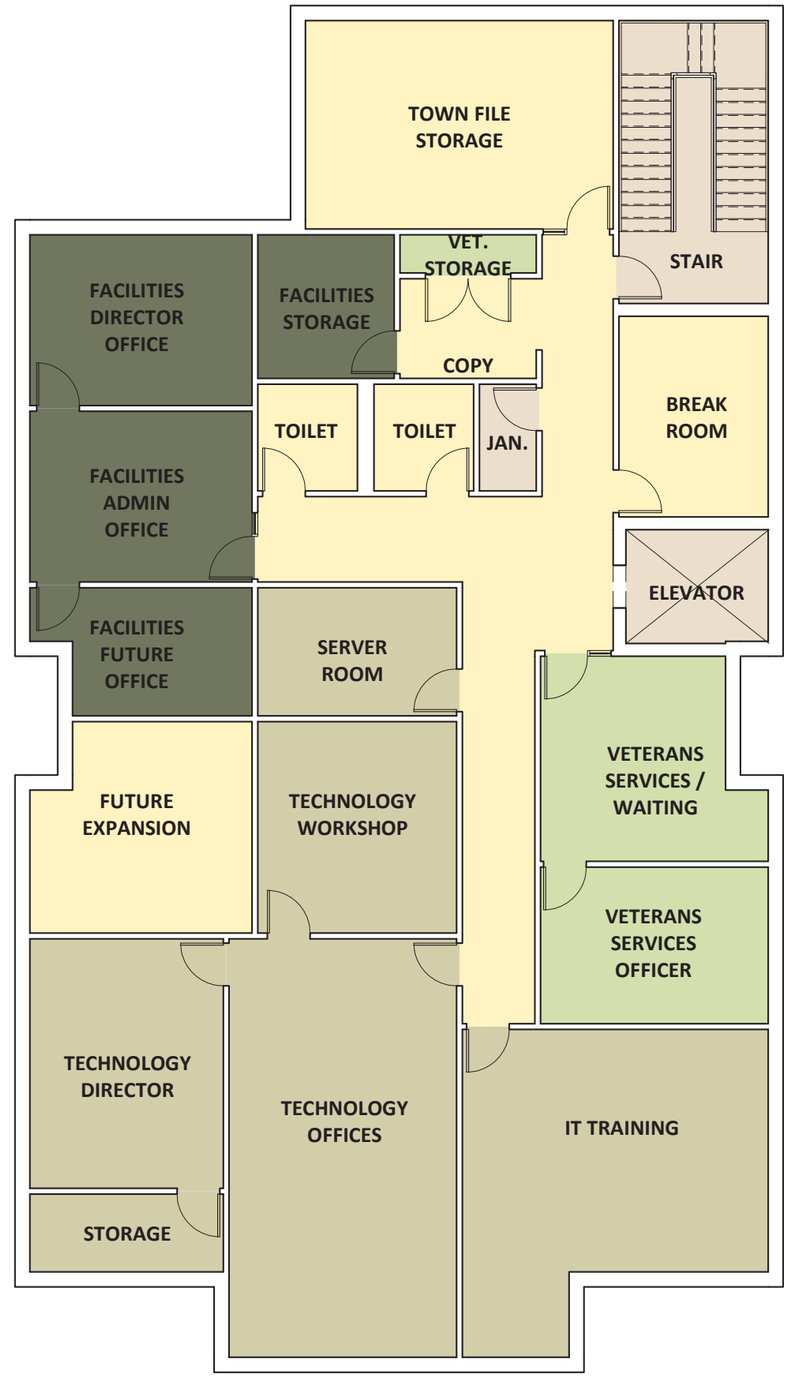

SECOND FLOOR - 4,677 GSF

PUBLIC & SHARED SPACES
TECHNOLOGY DEPARTMENT
VETERANS SERVICES
FACILITIES DEPARTMENT
BUILDING SUPPORT

context ARCHITECTURE

January 23, 2018

WESTFORD NEW CENTER BUILDING

View from Town Green

context
ARCHITECTURE

January 23, 2018

WESTFORD NEW CENTER BUILDING

SITE PLAN

EXISTING PARKING: 135
PROPOSED PARKING: 147

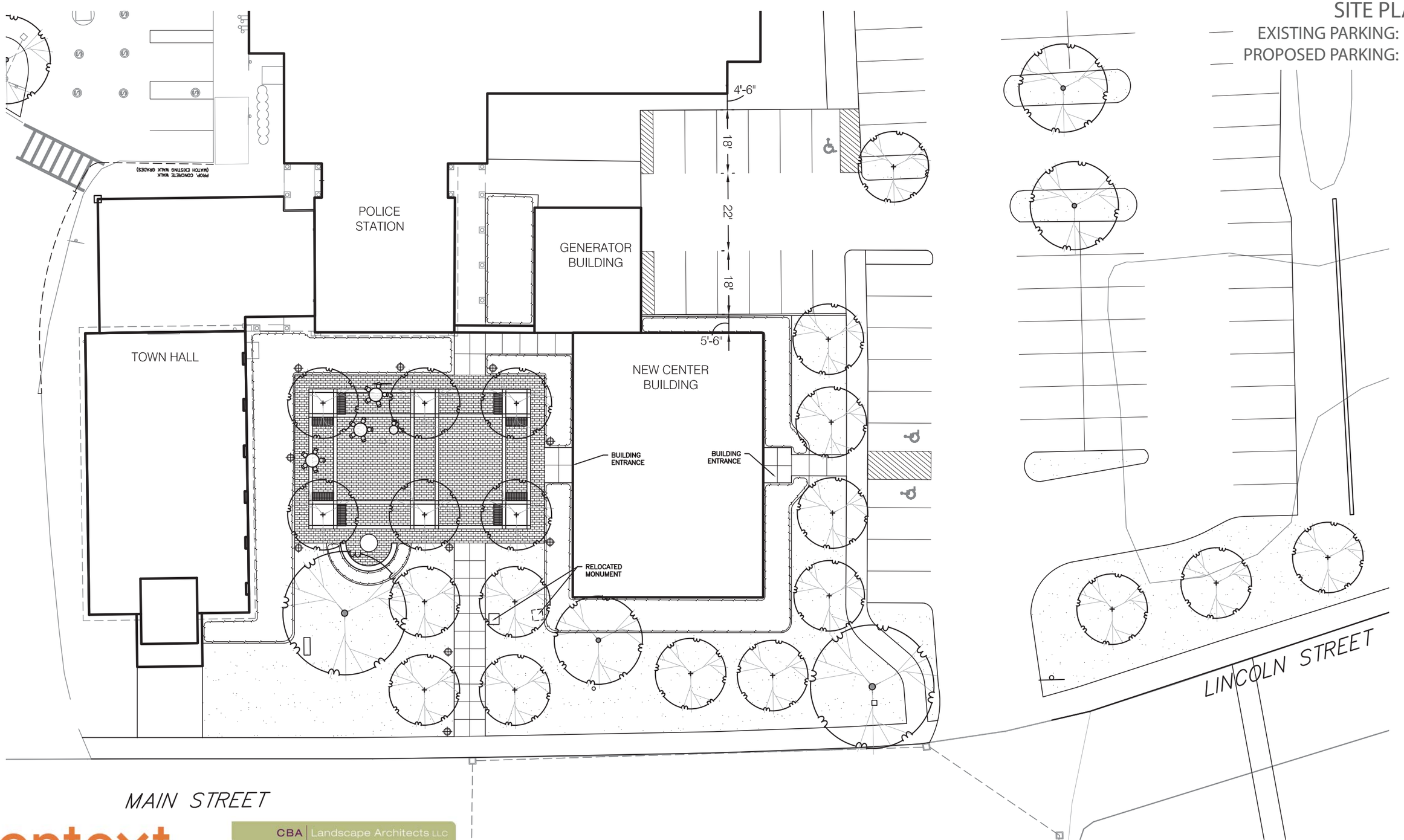

context
ARCHITECTURE

CBA | Landscape Architects LLC
24 THORNDIKE STREET | CAMBRIDGE MA 02141
phone 617.945.9760 | www.cbaland.com | cba@cbaland.com
landscape architecture | urban design | master planning

January 23, 2018

WESTFORD NEW CENTER BUILDING

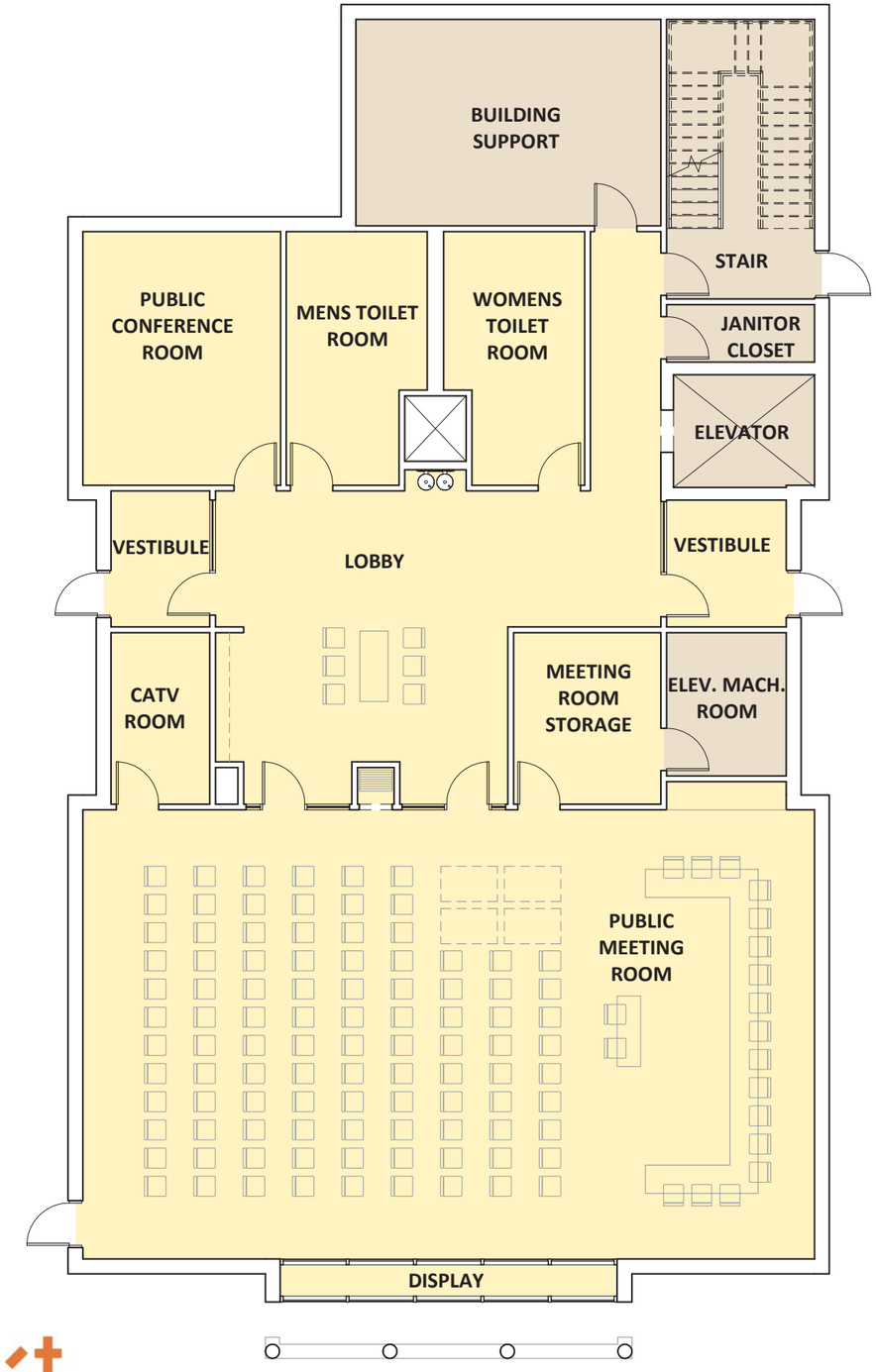

FIRST FLOOR - 4,540 GSF

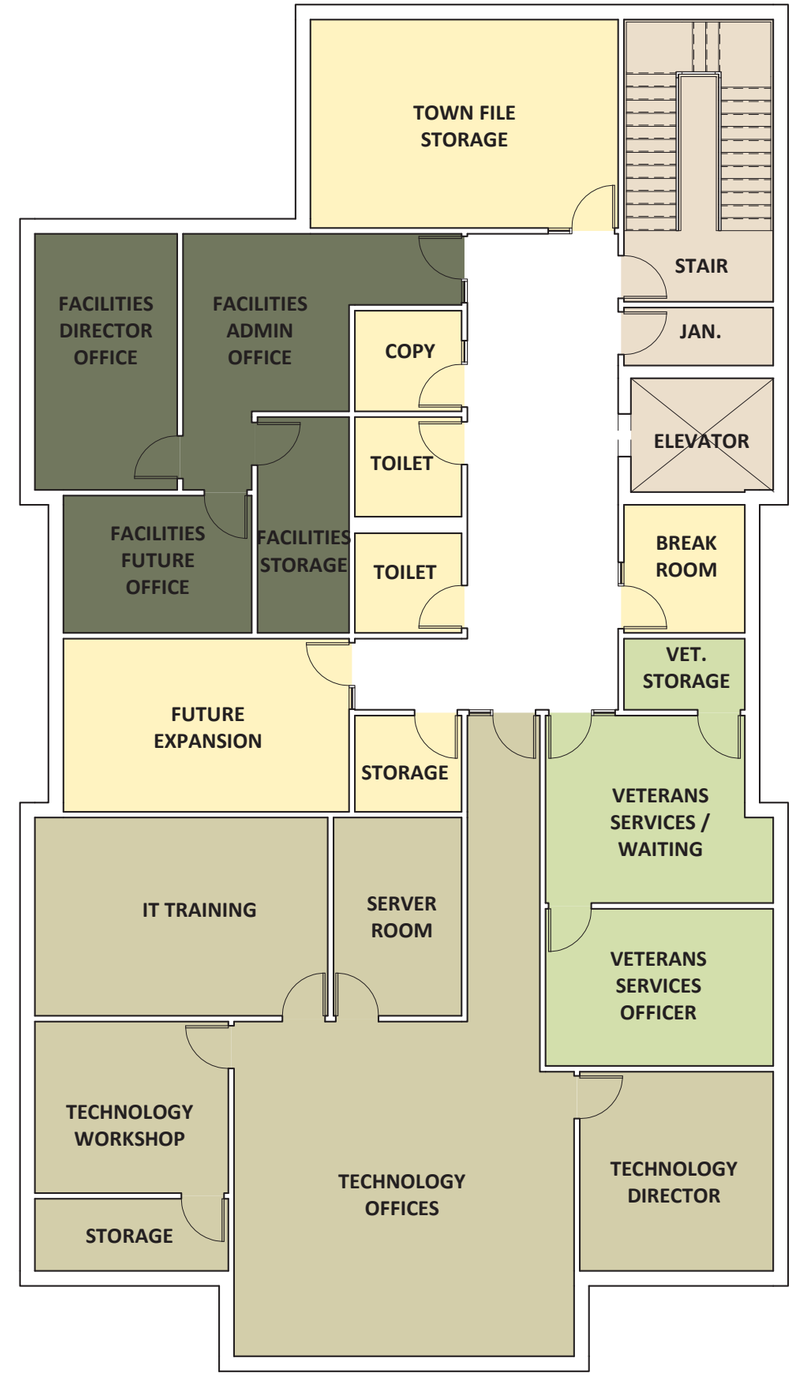

SECOND FLOOR - 4,644 GSF

PUBLIC & SHARED SPACES
TECHNOLOGY DEPARTMENT
VETERANS SERVICES
FACILITIES DEPARTMENT
BUILDING SUPPORT

context ARCHITECTURE

March 12, 2018

WESTFORD NEW CENTER BUILDING

View from Town Green

context
ARCHITECTURE

March 12, 2018

WESTFORD NEW CENTER BUILDING

SITE PLAN

EXISTING PARKING: 135
PROPOSED PARKING: 143

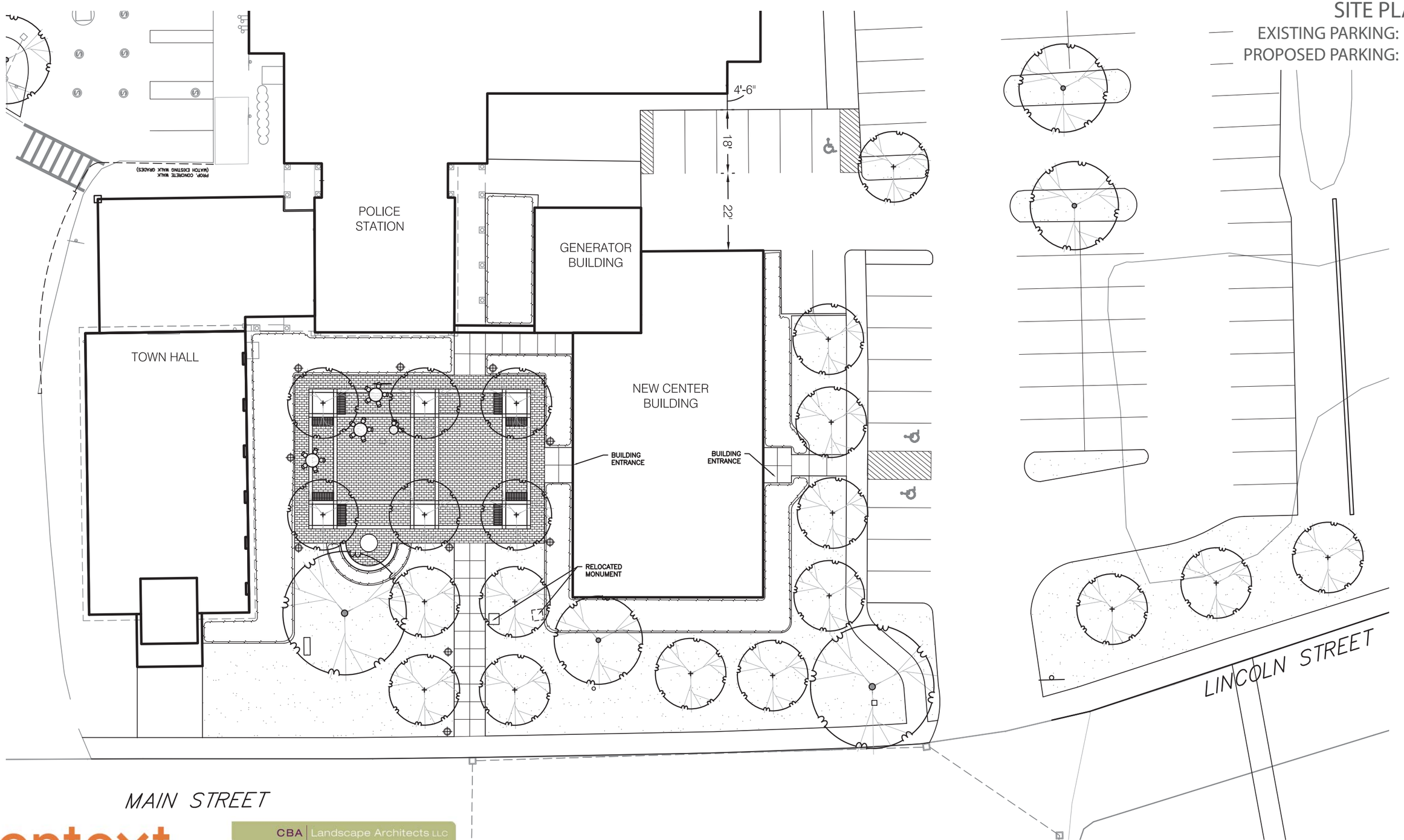

context ARCHITECTURE

CBA | Landscape Architects LLC
24 THORNDIKE STREET | CAMBRIDGE MA 02141
phone 617.945.9760 | www.cbaland.com | cba@cbaland.com
landscape architecture | urban design | master planning

March 12, 2018

APPENDICES

C. Meeting Notes

context
ARCHITECTURE

WESTFORD COMMUNITY BUILDING STUDY
Working Group Meeting #01 – 11.02.2017

Attendees:	Jodi Ross (JR)	Town Manager
	Eric Heideman (EH)	Assistant Town Manager
	Tom Mahanna (TM)	Chair PTBC
	Kirk Ware	PTBC
	Nancy Cook	PTBC
	Karen Cavanagh	PTBC
	Terry Stader	Veteran's Service Officer
	Mike Wells	Director of Technology
	Jeff Shaw	Context Architecture (CTX)
	Chris Logan	Context Architecture (CTX)
	Elizabeth Apeldoorn	Context Architecture (CTX)
Distribution:	All above, plus: File: 1712: 02.2.2	

1. **Project Goals** – project goals were identified and discussed

-JR stated that the Community Building should include a 100-person meeting room with dedicated A/V and storage rooms, Technology, Veterans and Facilities departments.

-Community Building should stay as close as possible to existing fire station footprint as possible.

-Connection to Town Hall from Community Building is desired. Use of Police Station lobby as link was suggested, CTX to investigate feasibility.

-EH stated that Community Building should be contextual in setting and should compliment existing surrounding buildings. Memorial courtyard is important.

-More parking is desired, CTX to investigate possibly expanding parking into wetlands as well as assess current Police Station parking; Police may have more than is needed. Proximity of HC parking will be important for Veteran's services.

-JR stated that new spaces in Community Building should be similar in size and finish as Town Hall.

-Security is important. Community Building should be able to be locked down in the event of an emergency; CTX to work with PD. IT servers should be centrally located in the building.

-New infrastructure should not tax existing flow. Septic system is limited by flow from Town Center to Waste Treatment Facility, CTX to contact Steve Cronin, Water Superintendent.

2. **Project Schedule** – additional meetings were identified and are to be added to the schedule

-Monthly PTBC meetings, CTX to give project update.

-Board of Selectman meeting, January 23rd 2018, preliminary conceptual building plans to be presented.

-Town meeting, March 24th

-Day/time for working group meetings was discussed; Thursdays at 11am is tentative day/time. CTX to send out meeting request.

3. **Project Budget**

-JR stated that cost is important and that if possible, it is desired that project stay within the levy limit. A conceptual cost estimate in January is desired.

-A figure of $3.2M was discussed but no formal budget has been set.

4. **Programming**

-IT space to be secure, limited public access, located on upper floor.

-Veterans to be close to and visible from main entry.

-A shared kitchenette is desired.

-A basement is highly desired, CTX to investigate feasibility; test boring reports from Police Station and Town hall projects to be reviewed.

-CTX to interview Technology and Veterans departments to review more specific space requirements/needs. EH to provide direction for Facilities Department. CTX to schedule interviews and tours of current facilities for week of 11/6.

5. **Needed Services** – additional services were discussed

-TM stated that LandTech Consultants Inc. has existing site plan, CTX to contact for more information.

-CTX stated that existing Fire Station environmental site assessment report done in 2014 did not include testing of asbestos, PCBs or lead testing. CTX to review study further and determine exact scope of additional services required.

6. **Next working group meeting is scheduled for Thursday November 16, 2017 at 11:00 AM.**

Agenda:
-Review first draft of program
-Review additional testing services required

7. **Attachments**
-Updated schedule, dated 11/3

These meeting notes contain information as understood by the writer. If there are any corrections, please contact the writer. Unless notified to the contrary, these notes are assumed to be accurate and will be entered into the project record.

Respectfully submitted,
Elizabeth Apeldoorn
Context Architecture

context
ARCHITECTURE

Westford Community Building Study
SCHEDULE
3 November 2017

2 November	**Kickoff Meeting**
	- Confirm the goals of the project
	- Confirm the project schedule
	- Discuss budget
	- CTX begins programming
	- Confirm needed services:
	  o Survey
	  o Phase I assessment (revisit 2014 Phase I Report – testing was not done)
	  o Hazmat testing (Phase I Reports only mentions PCB in fixtures)

6-10 November	Compile zoning & building code analysis Programming Interviews & facility tours
16 November	**Working Group Meeting** - Review first draft of program
30 November	**Working Group Meeting** - Review second draft of program, confirm final - Review results from engineers site visit and testing (if performed) - Review initial concept site options
4 December	**PBC Meeting** - Present project status update
14 December	**Working Group Meeting** - Review revised concept site options
11 January 2018	**Working Group Meeting** - Review preliminary conceptual building plans - Exterior appearance concept - Conceptual project budget
15 January	**PBC Meeting** - Present project status update
23 January	**BOS Meeting** - Present project status update
25 January	**Working Group Meeting** - Review progress site plan & building plans - Review progress exterior renderings - Review progress project budget
5 February	**PBC Meeting** - Present project status update
15 February	**Working Group Meeting** - Review final site plan & building plans - Review final exterior renderings - Review final budget & schedule
1 March	**Final Report & Presentation** - Assist with presentation to Town Manager and BOS - Hard copy and digital copy of presentation provided
24 March	**Town Meeting**

context
ARCHITECTURE

WESTFORD NEW CENTER BUILDING STUDY
Working Group Meeting #02 – 11.16.2017

Attendees:	Jodi Ross (JR)	Town Manager
	Eric Heideman	Assistant Town Manager
	Tom Mahanna	Chair PTBC
	Kirk Ware	PTBC
	Karen Cavanagh	PTBC
	Mike Wells (MW)	Director of Technology
	Jeff Shaw	Context Architecture (CTX)
	Chris Logan	Context Architecture (CTX)
	Elizabeth Apeldoorn	Context Architecture (CTX)
Distribution:	All above, plus:	
	Nancy Cook	PTBC
	Terry Stader	Veteran's Service Officer
	File: 1712: 02.2.2	

1. **Programming –** the first draft of the space needs was discussed

-Public Lobby: JR noted that size may be too large. CTX noted that lobby is sized to accommodate a 100-person meeting letting out and that actual size/layout will be determined as the building layout develops.

-Public Conference Room: JR noted that room will also be used for caucusing during public meetings and should be located close to the Public Meeting Room. Table to accommodate 10 people.

-Public Meeting Room: Security is important. All doors/glazing to be bullet proof and a panic button be added. An additional exterior door to be added to allow for additional egress and security. The sound issues with accordion walls was discussed. Wall to be included if sound transmission can be controlled. Seating capacity of room was discussed. JR noted that 100-person capacity is desired but not set in stone.

-CATV: CTX to contact Westford CAT, Lauren Horton, for specific requirements. CATV storage room to be combined with the public meeting room storage room.

-Staff Toilets: Doors to have closers and occupancy sensors. Room designation should be Male and Female, not Unisex.

-Break Room: More countertop space was requested, refrigerator can be under counter in lieu of full size.

-Technology Director Office: Remove (2) lateral files.

-Technology Workroom: MW requested desks be rearranged and high partitions be added for more privacy. TVs and conference table not required.

-IT Training/Conference Room: It was noted that room may be used for EOC. Projector and screen not required.

-Veterans Services: Department layout was discussed. Veterans Admin Office and Waiting Area to be combined and storage room can be included within building storage if needed.

-Facilities Department: JR noted that facilities department should ideally be located on first floor to minimize contractor traffic. More space for laying out plans should be added.

2. **Building Size**

-CTX noted that based on the space needs identified plus the inclusion of a basement the realistic square footage would be closer to 10,000SF however it was also understood that the goal is to reduce the space by combining and using flexible spaces to create a smaller footprint. This would have two important outcomes: achieve aesthetic balance with Town hall and to reduce overall cost. Town noted that 8,000SF should be the target.

-A basement level was discussed. CTX noted that a basement is possible but would be very expensive to waterproof and ledge might be an issue. Town stated that a basement is highly desired and should be included within this study; CTX to proceed with basement in building design.

-Square footage discrepancy between first and second floors was discussed. CTX to shift spaces to second floor and basement in order to more evenly distribute space to allow for a more efficient and cost-effective building.

3. **Building Connection**

-A direct connection to Town Hall building was discussed. Use of Police Station lobby as a connection was discussed again. Either first floor or second connection is acceptable.

4. **Next working group meeting is scheduled for Thursday November 30, 2017 at 12:00 PM.**

Agenda:
-Review second draft of program
-Review initial concept site options

These meeting notes contain information as understood by the writer. If there are any corrections, please contact the writer. Unless notified to the contrary, these notes are assumed to be accurate and will be entered into the project record.

Respectfully submitted,
Elizabeth Apeldoorn
Context Architecture

context
ARCHITECTURE

WESTFORD NEW CENTER BUILDING STUDY
Working Group Meeting #03 – 11.30.2017

Attendees:	Eric Heideman (EH)	Assistant Town Manager
	Kirk Ware (KW)	PTBC
	Karen Cavanagh (KC)	PTBC
	Matt Emanouil (ME)	Technology Department
	Terry Stader (TS)	Veteran's Service Officer
	Jeff Shaw	Context Architecture (CTX)
	Chris Logan	Context Architecture (CTX)
	Elizabeth Apeldoorn	Context Architecture (CTX)
Distribution:	All above, plus:	
	Jodi Ross	Town Manager
	Tom Mahanna	Chair PTBC
	Nancy Cook	PTBC
	Mike Wells	Director of Technology
	File: 1712: 02.2.2	

1. **Programming** – the second draft of the space needs was presented and discussed

-Male/Female Toilet Rooms: CTX noted that the fixture count shown is more than is required by code. CTX recommends the fixture count shown due to the nature/use of the Public Meeting Room. All present agreed with this approach.

-Copy Room: ME noted that space for a plotter is desirable. EH noted that there is not a need for a large amount of counter space in the Copy Room. CTX to provide space for plotter in the Copy Room or the IT Training Room.

-CTX to revise second draft and issue Final Space Needs Document.

2. **Building Layout**

-KW presented a building layout, noting that intent was to show an option with two equal sized floors that fits within the existing FS building footprint.

-CTX presented two building layouts (attached) which represent different ways to treat the massing of the building. Option A breaks the building down into smaller components to avoid competing with Town Hall while Option B shows a one single mass option. Building massing will be further explored.

-CTX noted that the occupancy count on the second floor would allow for a one stair option, which would save costs.

-Veterans Services: Locating Veterans Services on the second floor was discussed. TS is concerned about visibility and accessibility. CTX noted that locating Veterans on the second would mean all departments would be located on the same floor and would aid in wayfinding. All agreed second floor is acceptable if close to elevator door and appropriate signage is provided.

-Public Meeting Room: KC suggested locating meeting room on second floor to allow all departments to be located on the first floor. CTX stated that this would require a second stair and there would be concern with security and the inability of locking down the first floor after business hours.

-Technology Department: CTX asked if any spaces could be located on the basement level. ME noted that the Workshop/Storage and Server rooms could be located in the basement if needed.

3. **Site Layout**

-The following observations were noted:

- Maintaining existing FS building setback from Main Street is desired
- New Center Building will be taller than existing FS building
- Eave line of the Town Hall will be an important datum line; New Center Building should not dwarf Town Hall

-Current parking was discussed. CTX noted that a study of the existing parking needs has not been done. CTX requested current staffing information for the Town Hall and Police Department, including shift information and impound requirements, EH to provide.

4. **Cost Estimate**

-CTX asked if cost estimate should include worst case scenario for ledge/high water table issues or if additional geotechnical work should be done during this study in order to get a more accurate cost estimate. CTX noted that although probing would typically be undertaken, it would be undesirable due to the number of holes that would occur in the current concrete apparatus slab. It was suggested that borings in the apparatus slab and around the exterior of the FS building be done. KW instructed CTX to proceed with getting geotechnical proposals after more concept site layouts are studied.

-Cost of partial vs. full basement was discussed. CTX stated that cost would depend on site conditions and amount of ledge present.

5. **PTBC Meeting –** KW suggested CTX present to the committee at the 12/18 meeting in lieu of the 12/4 meeting, all present agreed.

6. **Next working group meeting is scheduled for Thursday December 14, 2017 at 11:00 AM.**
Agenda:
-Review revised building layout options
-Review initial concept site options
-Review staffing/parking needs

7. **Attachments**
-Building Layout Options handout (dated 11/30)

These meeting notes contain information as understood by the writer. If there are any corrections, please contact the writer. Unless notified to the contrary, these notes are assumed to be accurate and will be entered into the project record.

Respectfully submitted,
Elizabeth Apeldoorn
Context Architecture

context
ARCHITECTURE

WESTFORD NEW CENTER BUILDING STUDY
Working Group Meeting #04 – 12.14.2017

Attendees:	Jodi Ross (JR)	Town Manager
	Eric Heideman	Assistant Town Manager
	Kirk Ware (KW)	PTBC
	Mike Wells (MW)	Director of Technology
	Terry Stader (TS)	Veteran's Service Officer
	Jeff Shaw (JS)	Context Architecture (CTX)
	Chris Logan (CL)	Context Architecture (CTX)
	Elizabeth Apeldoorn	Context Architecture (CTX)
	Clara Batchelor	CBA Landscape Architects
Distribution:	All above, plus:	
	Tom Mahanna	Chair PTBC
	Karen Cavanagh	PTBC
	Nancy Cook	PTBC
	File: 1712: 02.2.2	

1. **Site Design**

-CBA presented three site layouts (attached) showing site concepts based on the location of the main entrance. Building footprints shown are approximately 4,000 SF. Option 2 was the preferred option.

-JR noted a landscape plan has been approved and funded by the Town for spring of 2018. JR to send plan to the design team for coordination.

-JR stated that the patio with seating shown in Option 2 next to the parking lot will most likely not be used and could be eliminated to save costs.

-JR questioned cost of courtyard work and if it should be included in this project. JS stated that it was important to keep the landscape in the courtyard consistent with the new work, as there will be a significant amount of change to the area.

-Connection to Town Hall: JR stated that the proposed entry points shown are not desired as they cause rearranging offices in Town Hall and the connection is an exterior one. An enclosed connection is preferred. JS stated that due to the likely high cost of making an interior connection between the Town Hall and the new building, any connection will be designed such that it is not integral to the functionality of the New Center Building, allowing it to be an optional component of the future project.

-Parking: parking is important and goal should be to maximize it. CTX stated that proposed parking required, including Town Hall and Police Department, is 203 spaces. Current parking count is approximately 135 spaces. KW noted that the 100 spaces for the 100-person meeting room may be reduced. CTX to review possible parking ratio for assembly type space. CBA to review if additional parking to the rear of the New Center Building is feasible. Added parking beyond wetlands was also discussed. It would be remote and would require filling at the wetlands. No further study at this time.

-Town monuments: TS listed the existing monuments. Site layout should identify monuments and any relocation should be reviewed. CTX to ask WFD about the three fire department monuments.

-Site signage: wayfinding is a concern, public should be able to clearly differentiate the Town Hall and the New Center Building as well as find departments with ease. How the building is perceived whether driving to or walking to should be considered. Design team to explore this further through the use of signage and other methods.

2. **Building Layout**

-CTX presented two building layouts (attached) which represent the different approaches to the building's entrance as shown in the site options. Option A shows the main entrance off of Main Street (site options 1 & 3) while Option B shows the two-entrance approach from the parking lot and courtyard sides (site option 2). Option B was the preferred option.

-MW noted that the layout of the Technology Department with regards to window locations works better in Option B.

-Future Expansion space shown in Option B was discussed. The location as shown makes the most sense and would be flexible for whichever Town department needs space.

-JS noted that the entrance into the Veterans Services office would be directly to the side when exiting the elevator.

3. **Existing Generator Building**

-JR questioned the intent of the existing generator building. CL gave a general inventory of the building and the factors limiting the relocation of the building.

-JS noted that the building could possibly be reduced. The initial approach would be to reclad the building and possibly rework the roof line to work with the New Center Building. Further study is needed.

4. **Geotechnical Work** - CTX to get pricing for two different testing approaches based on the building shape and location in site option 2.

5. **Next working group meeting is scheduled for Thursday January 11, 2018 at 11:00 AM.**
Agenda:
-Review progress building & site layout
-Review exterior appearance concepts
-Conceptual project budget
-Geotechnical update

6. **Attachments**
-Building & Site Options handout (dated 12/14)

These meeting notes contain information as understood by the writer. If there are any corrections, please contact the writer. Unless notified to the contrary, these notes are assumed to be accurate and will be entered into the project record.

Respectfully submitted,
Elizabeth Apeldoorn
Context Architecture

context
ARCHITECTURE

WESTFORD NEW CENTER BUILDING STUDY
Working Group Meeting #05 – 01.11.2018

Attendees:	Jodi Ross (JR)	Town Manager
	Eric Heideman	Assistant Town Manager
	Tom Mahanna	Chair PTBC
	Karen Cavanagh	PTBC
	Nancy Cook	PTBC
	Mike Wells	Director of Technology
	Terry Stader	Veteran's Service Officer
	Jeff Shaw (JS)	Context Architecture (CTX)
	Chris Logan (CL)	Context Architecture (CTX)
	Elizabeth Apeldoorn	Context Architecture (CTX)
Distribution:	All above, plus:	
	Kirk Ware	PTBC
	File: 1712: 02.2.2	

1. **Building Layout**

-CTX presented a revised layout of the preferred Option B. Major changes: layout has been mirrored to allow for easier access for contractors from parking area. All present agreed with building layout as shown.

-Public Meeting Room: CL noted that room as shown accommodates 103 audience seating. CTX to determine if third exit door from room is required by code.

-Basement: Town requested CTX provide a second building layout option with no basement.

2. **Building Design**

-CTX presented three building massing options showing different approaches to roof form and Main Street facades:

- Option 1: barn-style, Main Street façade not emphasized, roof slopes to Main Street.
- Option 2: prominent Main Street façade with architectural features similar to Town Hall.
- Option 3: prominent Main Street façade, single roof approach.

-JR stated that roof designs in Options 1 & 3 were not preferred. All present agreed that Option 2 was the preferred option. CTX to explore building access from Main Street and space for Town artifact and or local art display.

3. **Geotechnical Investigation** - CTX provided estimates prior to meeting, Town deferred to be done in phase 2 after Town meeting.

4. **Board of Selectman Meeting**

-Town requested the following be provided for presentation:

- Building floor plans
- Site plan
- Renderings (CTX to send on 1/18 for review)
- Pricing (ballpark figure)

5. **Next working group meeting is TBD.**

6. **Attachments**
   -Building layout and Massing Options handout (dated 1/11)

These meeting notes contain information as understood by the writer. If there are any corrections, please contact the writer. Unless notified to the contrary, these notes are assumed to be accurate and will be entered into the project record.

Respectfully submitted,
Elizabeth Apeldoorn
Context Architecture